AUS DEM MEDIZINISCHEN ZENTRUM FÜR ZAHN-, MUND - & KIEFERHEILKUNDE
DER PHILIPPS- UNIVERSITAT MARBURG (LAHN)
GESCHÄFTSFÜHRENDER DIREKTOR: PROF.DR. U. LOTZMANN
ABTEILUNG FÜR ZAHNÄRZTLICHE PROTHETIK
DIREKTOR: PROF.DR.U. LOTZMANN

THE USE OF ANGULATED IMPLANTS IN THE MAXILLARY TUBEROSITY REGION.
A 3- DIMENSIONAL FINITE ELEMENT ANALYSIS STUDY.

INAUGURAL- DISSERTATION
zur Erlangung des Doktorgrades der Zahnheilkunde
dem Fachbereich Humanmedizin der
Philipps- Universität Marburg
vorgelegt

von

Bilge Gökcen Röhlig
aus Istanbul,

Marburg-an-der-Lahn 2004

Angenommen vom Fachbereich Medizin der Philipps-Universität Marburg
am 09.12.2004.
Gedruckt mit Genehmigung des Fachbereich
Dekan: Prof.Dr. med. Maisch
Referent: Prof. Dr. Lotzmann
Korreferent: Pd Dr. Mengel

Danksagung

Ich danke Herrn Professor Dr. Ulrich Lotzmann für wesentliche Anregungen zu dieser Arbeit, für seine grosszügige Unterstützung und Förderung sowie für die Übernahme des Referates.

Besonders danke ich auch Herrn Dr. rer.nat. Jürgen Lenz für die engagierte Unterstützung und Herrn Dipl.ing. Stephan Rues für die Hilfe bei der Auswertung der Ergebnisse.

Weiterhin danke ich allen Kollegen der Abteilung für Zahnersatzkunde für die freundschaftliche Untertützung. Besonders hervorheben möchte ich bei Frau ZÄ. Sinanoğlu, deren Unterstützung und Hilfsbereitschaft in allen Situationen eine grosse Hilfe für mich war.

Schliesslich möchte ich mich bei meiner Eltern bedanken, ohne deren Unterstützung diese Arbeit nicht möglich gewesen wäre.

CONTENTS

Pages

1. Introduction …….……7

1.1 Scope of the study ……...7

2. Dental Implantology ……..10

2.1 Definitions and A Brief History of Implantology ……..10

2.2 Classification of Dental Implants ……...12

2.2.1 Implant Materials ……15

2.2.1.1 Metals 16

2.2.1.2 Ceramics 17

2.2.1.3 Polymers ……17

2.2.2 Implant Form ..……....19

2.2.3 Surface Topography and Coatings……..21

2.2.4 Methods of Implantation ……22

2.2.4.1 Transfixation ……..22

2.2.4.2 Submucosal Implantation ……..22

2.2.4.3 Subperiostal Implantation ……..23

2.2.4.4 Endostal Implantation ……24

2. 2.5 Healing ……..26

2. 2.6 Prosthetic Restoration ……....27

2.2.6.1 Fixed Ceramometal Prosthesis ……..27

2.2.6.2 Fixed Detachable Prosthesis ……..27

2.2.6.3 Fixed Removable Prosthesis ……..28

2.2.6.4 Overdentures ……..28

2.3 Osseointegration ……29

3. Treatment of Edentulous Maxillary Arches with Osseointegrated Implants …32

3.1 General Approaches..…….32

3.2 Anatomical Considerations ……...36

3.2.1 Bone Quality in Maxilla……...36

3.2.2 Bone Quantity in Maxilla ……39

3.2.3 Atrophy of Jaws ……..40

3.3 Surgical Techniques for Overcoming Compromised Bone Quality and Quantity in Maxilla ……42

3.4 Implant Use in the Tuberosity Region ……..45

4 Biomechanical Considerations …...……..47

4.1 Force Distributions by Natural Teeth ...……...47

4.2 Biomechanics of Implant-bone Connection ……...48

4.2.1 Maintenance of Implant Interface..…….…48

4.2.2 Occlusal Forces in Patients Treated with Osseointegrated Implants …..49

4.2.3 Force Transmission from Implants to Bone …….50

4.3 Biomechanics of Implant-supported Restorations ...……53

5. Finite Element Analysis in Dentistry ..……...54

6. Material & Method ……58

6.1 Model Design and Implant Dimension ..……..58

6.2 Material Properties ..……62

6.3 Interface Conditions ……63

6.4 Elements and Nodes ……63

6.5 Loading Conditions ……63

6.6 Software and Evaluation ……65

7. Results ..……66

7.1 Maximum tensile strain (σ_I) results ……67

7.2 Maximum compressive strain (σ_{III}) results ……69

7.3 Maximum von Mises' stress (σ_{equ}) results ……71

7.4 Vertical Loading Condition……77

7.5 Non-axial Loading Conditions..……..…78

8. Discussion 87
8.1 Limitations of the finite element analysis.....87
8.2 Implant Tilting 90
8.3 Anchorage System.....94

Summary 95

Literatur 97

1 INTRODUCTION

1.1 Scope of the study:

Today the number of edentulous patients within the populations is much more than it has been for decades. The clinicians are often faced with edentulous patients with high expectations of esthetics, function (chewing and oral function), and comfort. Conventional complete denture wearers often report denture dissatisfaction (implying uncomfortable and inefficient oral function) and this might lead to compromised nutritional status (Agerberg 1981, Ettinger 1973). These problems may be eliminated to a certain extend by the use of osseointegrated dental implants and the quality of life for many edentulous patients may be improved.

The rehabilitation of edentulous maxillary arches with osseointegrated implants is mainly determined by anatomical structures and the bone quality and quantity of the region. Although the maxilla is to be the easy arch to be restored with conventional total prostheses, in terms of osseointegrated implant therapy, it is the difficult arch to restore. The upper jaw presents inherent problems due to its morphology and configuration. The problems, such as reduced bone quality and quantity, close proximity of maxillary sinus wall may limit the use of osseointegrated implants in the treatment planning. In the presence of insufficient bone volume, either advanced surgical procedures should be performed or the implants should be angled and tuberosity implants should be used.

The placement of implants in the tuberosity region is a new concept. According to this, the implants are placed in tuber region, parallel to the posterior wall of the maxillary sinus. Such a placement has enchanted the prognosis of implants placed in posterior maxilla. Nearly in all reported clinical studies, the tuberosity implants were demonstrated to have more favourable success rates than the implants placed in any region in maxilla. From a surgical point of view, implant placement in tuberosity is a safer alternative to sinus lift procedures or other advanced surgical approaches. When tuberosity implants are used, it is suggested to distribute the implants along the edentulous arch; two placed in tuberosity region and four placed in the anterior-premolar region and then connecting them with a horse- shoe shaped bar. The clinical and the experimental biomechanical studies have shown that the bar supported removable prostheses

represent more favourable results than cantilever bridges, especially in respect to load distribution (Krämer 1992, Benzig 1995).

There are limited numbers of studies on tuberosity implants, many of which have examined either the success and/or survival rate of the implants in the posterior maxilla, or discussed the surgical difficulties of the region, recommending a new surgical technique for placement an implant in maxillary tuberosity. None of them has evaluated the biomechanical factors related to implant tilting. Furthermore it is unclear which implant inclination is more favorable in relation to the supporting anatomy and loading directions in the maxilla. Little care has been given to define the mechanical loading conditions and the precise effect of occlusal forces acting on the implants placed with an angle.

As a conclusion, it is difficult to make a sound recommendation about the tuberosity implants from what is written till now, as there is limited data and the available data is varying. Further research is needed to define the optimized biomechanical conditions associated with implants placed in tuberosity before they are represented as an alternative treatment modality. Prospective controlled clinical trials alone cannot answer the questions related to the implants in posterior maxilla. Scientific research, in other words experimental evidence regarding the mechanism of load transfer through a tilted implant to the surrounding bone is needed, too. Improved understanding of the stress distribution in maxilla would help the clinician to provide the best inclination and position to maintain the optimal occlusal loading. Under this aspect, an in-vitro analysis investigating the risk factors of angled implants is more advantageous than learning by clinical experience.

The stress distribution of forces in peri-implant bone has been investigated in vivo by different methods; photoelastic model studies, strain gauge analysis on physical models and/or 2-3 dimensional finite element model analysis (FEA) (Gross et al. 2001, Jäger et al 1993, Lenz et al 2001, Kawasaki et al 2001, Williams et al 2001, Kenney&Richards 1998). The complexity of the implant-bone system and properties of bone precludes using a technique that can give detailed qualitative analysis of the interaction between implant, tooth, ligament and bone. For a reliable and realistic stress and strain distribution measurement in bone, 3-D FE model analysis is the recommended technique. For this reason in this study an anatomical three dimensional finite element of an atrophied maxilla is used to calculate the stress and strains around the tuberosity implants.

This study is designed;

1) to examine the magnitude and character of the loads acting on the tuberosity implants placed in an atrophied edentulous maxilla by the help of a 3D Finite Element Model Analysis,

2) to examine the effect of different implant inclination on stress distribution in a 3D Finite Element Model.

2. DENTAL IMPLANTOLOGY

2.1 Definitions and a Brief History of Implantology

A dental implant is defined by the Glossary of Prosthodontics as "*a prosthodontic device of alloplastic material(s) implanted into the oral tissues beneath the mucosal and/or periostal layer, and on/or within the bone to provide retention and support for a fixed or a removable prosthesis* ". In other words; an osseointegrated dental implant system consists of screws connecting prosthesis to the jaws such that a force due to biting and chewing is distributed over the bone (Fig 1).

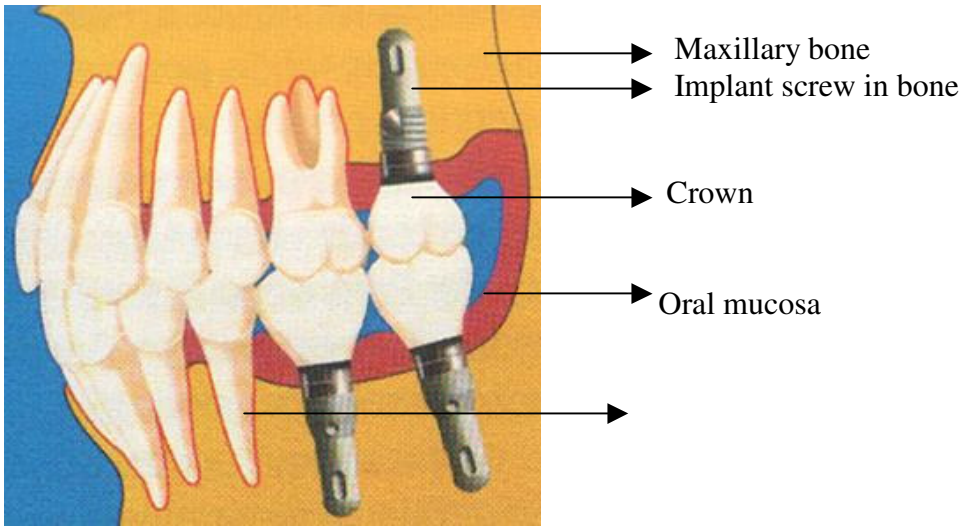

Fig 1: An osseointegrated implant in bone

The effort and wish to replace a missing part of the body is as old as human history. The constant need of restoring function and aesthetics has greatly devoted the scientists' time throughout the ages. In ancient times, naive artificial units such as a stone, or a wooden implant or even an animal tooth have been used as an anchorage device in maxilla and mandible (Ring 1995, 1995a). A Houndran skull from pre-Columbian times is cited as one of the first known dental implants (Schroeder, 1996). A mandibular incisor had been replaced with a black stone. It was first at the beginning of 18th century that a golden implant in root- form has been used (Watzek et al. 1993). Thereafter, root formed implants made of different materials; such as silver, platen, gutta-percha, gummy or porcelain has been reported (Berry 1888, Andrew 1893). These implants have been placed in the alveolar sockets immediately after the extraction. At the end of this century the introduction of local anestheticum and turbines have enabled the preparation of an implant bed. During this period various attempts have been presented, many of which have

resulted in an inadequate or an unsatisfactory way. It was first with the introduction of dental radiography that a scientific attempt in the area of implantology was performed; a radiological evidence of an implant was demonstrated. In 1913 for the first time an American clinician Dr. Greenfield has presented radiologically a platen- iridium implant in premolar area in upper jaw (Greenfield 1910).

The idea of replacing a missing root with an artificial unit to provide support for prosthesis has been developed and the fundamentals of implant dentistry was constructed. In 1937 Müller and in 1941 Dahl have inserted subperiostale implants by their edentulous patients who were unable to wear a total prosthesis. This method was accepted by the other scientists (Greshkoft, Goldber, Gershkoff, Ogus, Hammer, Reinchenbach, just to mention a few) in Europe and in USA and has been used for nearly twenty years. But high failure rates have led to a loss of interest. In late 1930s, the Strock brothers experimented with vitallium screws, using a passive (inert) material for the first time (Schroeder, 1996). Subsequently various screw designs have been developed by the researchers (Formiggini, Scialom, Chercheve, Sandhaus, Tramonte, Heinrich) (Brandt 1996). As implant material stainless steel, chrome- cobalt- molybdenum alloys, titanium, tantalum and aluminium oxide were often recommended. In 1967 Linkow presented his titanium- blade implants. He aimed to increase the implant surface in order to distribute the masticatory forces over as large a bone mass as possible and to create a basic design which could accommodate all anatomic restrictions of the jaws. Linkow' s blade implants have achieved worldwide acceptance. However, Brånemark et al first introduced the modern era of implant dentistry in mid 1960s. His early vital microscopic studies focusing on wound healing and rheology in bone and soft tissues gave rise to the concept of osseointegration (Brånemark et al. 1969). The use of Ti chamber as an anchorage device for dental restorations was first described in a study on dogs. Brånemark and colleagues has defined osseointegration on the microscopic level as “a *direct structural and functional connection between ordered, living bone and the surface of a load- carrying implant* " (Brånemark 1985). The original concept " *ad modum* " was based on the placement of four to six standard 3,75mm titanium implants in the edentulous mandible anterior to the mental foramina.

During the same period other investigators were experimenting independently with Ti endosseous implants. The IMZ Implants (Koch), ITI Hollow-cylinder Implants (Schroeder), The Tübinger Immediate Implants (Schulte), the TPS Implants (Ledermann) are only the examples of the other designs that have been emerged in a period of 1970-1980. In a short time dental implantology has showed a great development and the concept of osseointegration was moved from experimental use to a routine clinical use worldwide. The investigators attempt to

incorporate an artificial structure within a biological system without pathological signs and symptoms were achieved and a rigid fixation was maintained in bone during functional loading (Zarb et al. 1991).

The current status of implantology was achieved throughout various surgical and prosthetic concepts, materials and implant forms, all based on an increasing understanding of biocompatibility, tissue healing and functional requirements. Today the implantology has become a reliable and widely accepted treatment modality. Although they were originally introduced for the treatment of totally edentulous arches, they have broadened their indications and are now being used in nearly all fields of dentistry: in the treatment of partial and complete edentulism, in craniofacial surgery, and in orthodontics as an anchorage device.

2.2 Classification of Dental Implants

The dental implant marketplace has expanded substantially since the first introduction of concept in 1982, bringing innovation to the industry and producing a significant number of different implant systems.

Generally the aims of the oral implantology can be defined as follows:

- *Improvement of the masticatory function*: Stabilization / retention of the prosthesis
- *Protecting the natural dentition*: Avoidance of restorations (crowns)
- *Protecting the remaining structure*: Retardation of residual ridge reduction (Atrophy prophylaxis).

In the mean time an impressive amount of data has been collected. The data used to evaluate the results or quality of an implant system must scientifically be judged. Since 1978, there have been many different criteria proposed for implant success. The first described success criteria were the National Institute of Health (NIH)- Proposal (Schnittman and Shulman, 1979). Thereafter in 1986 Albrektsson et al., and in 1990 Buser et al. have described strict parameters for success of an implant system and evaluating the long-term results of the clinical trials. They are graphically listed in Table 1.

NIH-Proposal Schnitman and Shulman, 1979 (National Institute of Health Proposal)	**Proposal by Albrektsson et al., 1986**	**Success criteria by Buser et al., 1990**
To be considered successful, the dental implant should provide functional service for five years in 75 % of the cases.	A successful rate of 85% at the end of five- year observation period and 80 % at the end of a ten- year period is minimum criterion for success.	Absence of recurring peri-implant infection with suppuration
Radiologically observed radiolucency graded but no success criterion defined	A radiograph does not demonstrate any evidence of peri-implant radiolucency	Absence of persisting subjective complaints such as pain, foreign body sensation, and/or dysesthesia
Mobility of less than 1mm in any direction	An individual, unattached implant is immobile when tested clinically	Absence of a continuous radiolucency around the implant
Gingival inflammation amenable to treatment. Absence of symptoms and infection, absence of damage to adjacent teeth, absence of paresthesia and anesthesia or violation of the mandibular canal, maxillary sinus, or floor of the nasal passage	Individual implant performance is characterized by an absence of persistent and/or irreversible signs and symptoms such as pain, infection, neuropathies, paresthesia, or violation of the mandibular canal	Absence of any detectable implant mobility
Bone loss no greater than a third of the vertical height of the implant	Vertical bone loss is less than 0,2 mm annually following the implant's first year of service	

Table 1. Criteria for evaluating the success of an implant system

NIH- Proposal, by Schnitman and Shulman, 1979 (Schnittmann et al., 1979)
Proposal by Albrektsson, Zarb, Worthington, and Eriksson, 1986 (Albrektsson et al 1986)
Success criteria by Buser and co- workers, 1990 (Buser et al. 1990)

Dental implants can also be classified according to various parameters. A brief summary of classification is given in Table 2.

Materials	- Metal - Ceramics - Polymers
Implant form	- Extension (Blade, Disc Implants) - Root- formed (Cylinder, Screw Imp.) - Transmandibular
Surface topography	- Machined - Hydroxilapatit coated - Plasma spray coated
Methods of Implantation	- Transfixation - Submucosal - Subperiostal - Endosteal
Healing	- Submerged - Non- submerged
Implantation Time	- Immediate - Early - Conventional
Prosthetic Restoration	- Fixed ceramometal prosthesis - Fixed detachable prosthesis - Fixed removable prosthesis - Overdentures i) Implant supported overdentures ii) Implant- tissue supported overdentures

Table 2. Classification of Dental Implants

2.2.1 Implant Materials

The implants are subjected to high levels of mechanical loading and are in direct contact with living tissues. An implant material should fulfil the mechanical and physical requirements as well as the biological ones. In a mechanical point of view, the implant material should have sufficient physical properties (such as tensile strength and Young's Modulus) but with a stiffness that approaches to bone (Newesely, 1981). In a pure biological point of view, the interaction between the material and vital tissue should be so minimal that either the tissue or the material should be affected. The biological interaction between the tissue and the implant material at an interface may result in a variety of reactions (Smith 1993):

- Leaching
- Corrosion
- Mechanical process
- Adsorption
- Denaturation
- Catalysis.

The materials being used or have been used in implant dentistry can be categorised either in a chemical point of view (as metals, ceramics and polymers) or according to their biodynamic activities (as biotolerant, bioinert or bioactive). It is the fact that no material is completely accepted by the biologic environment.

2.2.1.1 Metals

Figure 2: Titanium and its alloys (mainly Ti-6Al-4V) are being used for the endosseous part of the implants.

Occasionally various metals and metal alloys have been used for the fabrication of dental implants but many of them have produced adverse tissue reactions, and low long term success rate (gold, stainless steel, cobalt- chromium). Titanium and its alloys (mainly Ti-6Al-4V) have become the choice for endosseous parts of the implants and gold alloys, stainless steel, and cobalt- chromium and nickel- chromium alloys are the choice of prosthetic components (Fig 2). There are good reasons to consider titanium as the implant material. Titanium is a reactive material, which means that in contact with any other electrode an oxide is spontaneously formed on the surface, resisting to chemical attack (Parr et al 1985, Kasemo et al 1985). It is inert in tissue and possesses good mechanical properties. It has compatible elasticity modulus with bone. Titanium does not behave passively in the tissue; it allows bone grows into the rough surface and bonds to the metal resulting in an anchorage in bone. Some other elements, such as iron, nitrogen, aluminium, vanadium, carbon and hydrogen have been added to Ti alloys in order to improve the mechanical and physicochemical properties and stability of the alloys (Meffert 1992, Tanahashi et al. 1996).

2.2.1.2 Ceramics:

Fig 3: The Frialit- 1implant screws were produced of pure aluminium

A wide variety of ceramic materials have been used in implant dentistry. In 1970s alumina, hydroxyapatite [$Ca_{10}(PO_4)_6(OH)_2$] (HA), tricalcium phospahate ($Ca(PO_4)_2$) and bio glasses were presented as implant materials (Fig 3). In implantology the use of ceramics has begun with CBS Anker (Crystalline Bone Screws). These implants were made of pure aluminium oxide. Thereafter in Germany two different ceramic implants Biolox®, and Frialit- 1 were presented. They were composed of 99,7 % aluminium oxide. Judged by the mechanical requirements of the implantology, as bulk material, hydroxyapatite and tricalcium phospahate are at disadvantage because of their unacceptable brittleness (Lemons 1990). The studies have shown that ceramic implants forms a chemical bond with the bone which is not enough to withstand functional loading, have low flexural strength and high degree of solubility (Wataha 1996, Lacefield 1998, Hench et al. 1984). The behaviour and properties of this group of materials have proven to be extremely complex and problematic. Today they are being used as coatings on metallic cores with good biological responses.

2.2.1.3 Polymers

A variety of polymers, polyurethan, polyamide fibers, polymethylmethacrylate resin have been used as implant materials (Lemons 1990, Glantz 1998, Carvalho et al. 1997). It was hoped that their flexibility would mimic the micromovements of the periodontal ligament and possibly allow connection of the natural teeth. However their inferior mechanical properties and poor biological response have limited their use (Sykaras et al. 2000). Today they are being used in manufacturing shock- absorbing components incorporated into the implant- supported structures.

2.2.2 Implant Form

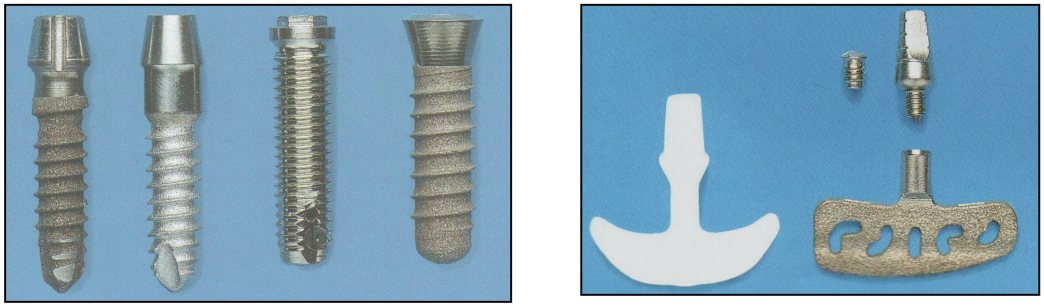

Fig 4: Cylinder and screw formed implants (left) and extension type implants (right). (Adapted from Spiekermann, 1995).

Different designs have been employed to establish a stable fixation between the implant and the bony tissues, and subsequently preserving this anchorage during the function. Mainly the implant forms can be categorised into two different groups; blade (extension), and root- formed (cylinder, and screw- formed) implants (Fig 4). In the late 1940s, the blade vent implants were introduced by Linkow (1967) and have been used intensively for nearly 30 years. (Linkow 1966). The main indication was the treatment of edentulous arches. However their experimental and clinical long-term success rate was unsatisfactory and they have shown various soft tissue problems and continuous bone deterioration (Albrektson et al 1986). Today they are not being used routinely, but rarely indicated where extreme bone atrophy is present and any advanced surgical procedure cannot be performed.

The mechanical criteria, the desire for surgical simplicity, better primary stability, greater predictability in poor-quality bone, strength and biocompatibility of the implant materials led to the choice of cylinder or screw form as the basic design concept. Initially 3 basic shapes were introduced; a threaded screw (*ad modum*), a press-fit cylinder (*IMZ Implants*), and a hollow basket cylinder (*ITI Implants*). They have been evolved into several different forms; transverse openings in the side walls, grooves or ledges, parallel, tapered/conical or a stepped outline, flat, round or a pointed apical end. Threads are introduced to maximise initial contact, to improve the primary stability and to enlarge the implant surfaces (Carlsson et al. 1986, Frandsen et al. 1984, Ivanoff et al. 1997). Thread patterns range from micro threads near the neck of the implant (*Astra Tech*), broad macro threads on the mid-body (*Biohorizons, Steri-Os*) to altered pitch threads to

induce self- tapping and bone compression (Nobel Bio-Care) and small limited-length threads for initial stability (*Basic*) (Binon 2000).

In addition to these forms, transmandibular implants have been introduced as an alternative implant design in selected cases. Transmandibular implants require placement via an extraoral submental approach. Endosseous threads are emerged into the mouth and secured to a baseplate that is in turn screwed to the lower border of the mandible. The intraoral parts of the posts are joined with a laboratory custom-made bar soon after the surgery (Dover 1999). The technique has advantages in the atrophic mandible and allows for a submental lipectomy and chin contouring at the same time as implant placement but it has not found universal favour because of the need for an external approach and general anaesthesia.

2.2.3 Surface Topography and Coatings

Microscopic surface feature is essential in establishing and maintenance of the rigid implant- to-bone connection. Implant surfaces are designed to increase the rate of new bone formation and to reduce the inadvertent forces acting on the implants. As the other characteristics of the dental implants, the surface features have also undergone a number of different developments. Independent of the implant chemistry, the variation of the microstructure influences the stress distribution, retention of the implants in bone and cell responses to the implant surfaces (Ellingsen 1998). Each implant should have a micro roughens that allows fixation of trabecule and consequently transmission of forces. Davis has shown that an adequate implant surface texture optimises the biological responses of the bone (Davis 1998). The original offerings of implant surface were machined titanium surfaces (*Implants*), titanium plasma spray (*ITI Implants*), and hydroxyapatite coating (Calcitek).

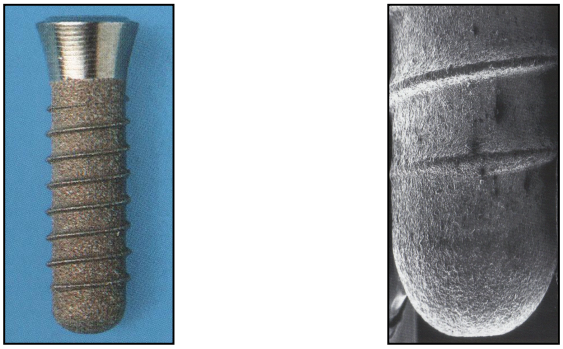

Fig 5: ITI implant with TPS surface (left),
SEM picture of the surface (right)
(TPS: Titanium plasma spray, SEM: Scanning electron microscope)

Smooth surfaces (machined titanium surfaces) have been used for a longer time than all other types of implants. They are usually threaded to mechanically lock with the bone and achieve primary stability. A smooth surface does not provide a strong implant anchorage in bone, especially in compromised sites with poor bone quality or reduced vertical bone height, such as posterior maxilla or the atrophied edentulous arches. Roughened implants have pitted surface or Ti- plasma sprayed surfaces (Fig 5). The titanium plasma coating (TPS) was first introduced by Hahn and Palich and has been used in implant dentistry more than twenty years (Hahn et al 1970). TPS enables a greater surface area fostering direct bone apposition to the implant surface (Binon 2000). A rough surface favours the osseointegration by allowing a strong physical

interlock between the roughened Ti surface and bone trabecules and promotes increased bone-implant contact. Roughened surfaces have an important role in diminishing the effect of shear strains along the interface during the bone remodelling process. Therefore these types of implants can be produced in smaller lengths and do not require bicortical engagement. Retrospective and prospective long-term studies with up to twenty years of follow- up have indicated excellent results (Babbush et al. 1986, Buser et al 1997, Ledermann 1996). However disadvantages due to the coating such as detachment of titanium particles from the surface leading them being located in periimplantic bone has been reported. Therefore alternative surface technologies without coating have been evaluated. Hydroxyapatite (HA) coating is one of the alternative coating methods (Fig 6).

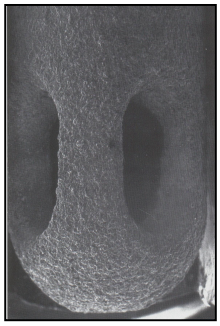

Fig 6: SEM picture of a HA implant (Omniloc)
(SEM: Scanning electron microscope, HA: Hydroxyapatite)

Hydroxyapatite (HA) coating is used for forming ionic bonds with the bone in order to achieve greater bone contact. Different experimental studies showed good primary healing with the addition of a layer of HA onto the titanium (Thomas et al 1987, Cook 1992, Wong 1995). They have been advocated for use in cancellous bone of the maxilla but concern has been expressed over the durability of the coating (Dover 1999).

Other alternatives are the treatment of the commercially pure titanium layer by sandblasting or acid- etching. Experimental (Lazzara 1999) and clinical studies (Osseotite^{M} implants; Sullivan et al 1997, Lazzara 1998, Grunder 1999) report extremely good results for surfaces with etched with HCl / H_2SO_4 . SLA surface (sandblasted and acid- etched surface) has been proposed by the Straumann Institute in order to improve the initial stability in low-density bone and to maximise the quality of the bone- implant interface. It provides advantages in clinical application by reducing the routine unloaded bone healing time. In a histological study, the percentage of direct bone contact was analysed for different surfaces; sandblasted, HA- coated, TPS and acid- etched

(Buser et al. 1991). Sandblasting and acid- etched have the highest percentage of bone / implant contact.

2.2.4 Methods of Implantation

Implants are mainly operated in four different methods.

2.2.4.1 Transfixation

In the last 50 years, a great number of studies have been published about the transfixation method (transdental fixation). This method involves the use of a metal or a ceramic pin inserted down the root of a tooth through the apex and into the surrounding bone. Thereby the natural tooth root and the epithelial attachment are retained. This method was first presented by Strock in 1943 (Brandt 1996,a) and later it has been improved and used by many other researchers and clinicians. Different pin materials (metal and ceramics), with various forms (conical, cylindrical, or screw) and surface textures (smooth or porous) have been suggested. The most important advantage of the method is that the implant perforated the gingival collar that avoids any bacterial colonisation.

2.2.4.2 Submucosal Implantation

This method involves implanting small button- like retention elements under the mucous membrane. The submucosal implants provide retention by sinking into surgically created holes in the palate, particularly in edentulous maxilla. The male attachment is fitted into the denture, and the mucosa acts the female component. They are not being used anymore, because they exacerbate the bone loss in atrophic maxilla.

2.2.4.3 Subperiostal Implants

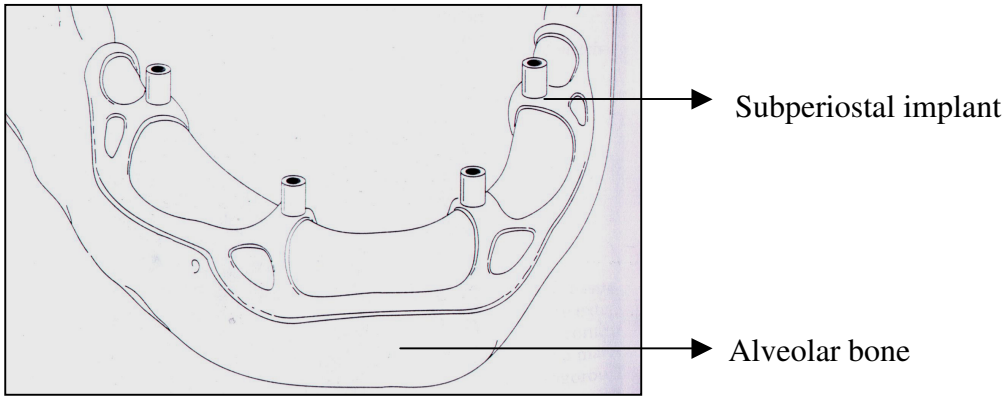

Fig 7: A subperiosteal implant is placed on the alveolar ridge and is connected to bone by a fibrous connective tissue layer.

Subperiostal implants were introduced 50 years ago by Müller (1937) and Dahl (1943). They are not anchored inside the bone as endosseous devices but are shaped to ride on the rest bony ridge and are connected to bone by fibrous tissue (Fig 7). As implant material vitallium, aluminium-oxide, carbons have been used. Many of these implants should have to be removed because of inflammation, post-insertion dysesthesia, swelling and bone resorption. Bodine and Yanase have reported ten-year successes rate of % 66 and 15 year of 54 % (Bodine 1985). This work was the only study in which the long-term success rate of subperiostal implants was reported to be satisfactory. Because of the poor long-term success rate and the improved results of the endosteal implants, they are not being used routinely anymore. But they remain of value in selected edentulous cases where narrow ridges, deep undercuts and severe angulation or insufficient bone mass preclude endosteal implants.

Recently the development of the accurate computer aided design / computer aided manufacture (CAD / CAM) derived models have renewed the interest in this type of implants. The use of computerised tomography (CT) and CAD / CAM enables the creation of an accurate model of the jaws from CT scans. Implants can be produced on this computer-generated model and inserted in a single surgical procedure, thereby avoiding the need for the impression and the first operation.

2.2.4.4 Endosteal Implants

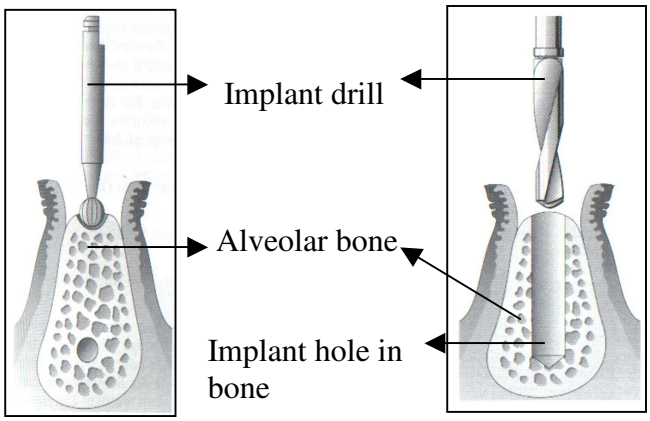

- a - *- b -*

Fig 8 a, b: Endosteal implants are surgically placed into the bone by the help of drills. (Adapted from Brandt, 1996)

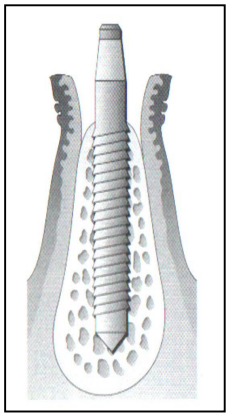

- c -

Fig 8 c: An endosteal implant in bone (Adapted from Brandt, 1996)

Among the other types of implants, the endosteal implants are the only ones that have achieved great acceptance. A brief history of the endosteal implants has been previously mentioned. They are surgically placed into the implant bed congruent to the implant base (Fig 8). A standardised range of drills is used for preparing the implant bed for various types. The endosteal implants are stabilised in bone via a solid bond, termed osseointegration or ankylotic anchorage, which will be briefly explained later.

The endosteal implants should meet some specific conditions to achieve long- term success. The minimum requirements can be defined as follows:

1. *Function*

An endosteal implant should replace the missing function of the teeth.

2. *Longevity*

An implant should preserve itself so long as the surrounding tissues.

3. *Biocompatibility*

Neither the surrounding tissues nor the rest of the organisms should be affected by the implant. In other words, the interaction between the implant and the vital tissues should be so minimal that the surrounding bone, epithelium, sub-epithelium and the associated vascular and nerve supply should not be damaged.

2. 2.5 Healing

Several investigators have reported successful results with submerged or non- submerged healing (Buser et al. 1997, Adell et al. 1991, Wagner 1999). In the early protocol of, submerged, undisturbed healing was a prerequisite for successful osseointegration (Branemark et al. 1969, 1985). The closed mucosal system, in which the primary part of the implant is sunk to the level of bone crest, so that the mucoperiostal flap can be sutured over the implant, was suggested. The work of Ledermann suggested otherwise (Ledermann et al 1989). His protocol indicated non-submerged implant placement and immediate loading of the implants in the anterior mandible. Other investigators followed this method. Schroeder reported in the favour of a non-submerged system, in which the primary part is inserted such that the top remains about 3 mm above the bone crest. The margins are adapted around the neck of the implant (Schroeder 1996).

The healing time varies between 3 to 6 months depending on the operative side, quality of bone, age of the patient and the implant system used. As a general rule, if the implant side exhibits “normal bone " structure, i.e., firm, cortical bone, a three-month healing period with no functional loading is recommended. When there is predominantly soft cancellous bone, at least 4 months are recommended before the prosthetic treatment begins (Schroeder 1996). Clinical experience has proven that implants with TPS surface can be loaded after 3 months in all sites with adequate bone density, irrespective of whether the implant is in maxilla or in mandible. But the implants with machined surfaces require 6 months of healing time in the maxilla and 3- 4 months in the mandible.

2 2.6 Prosthetic Restoration

Osseointegrated implants were originally designed for the edentulous arches to support a fixed detachable (cantilever prosthesis) prosthesis. However alternative designs have evolved for treating patients with special needs. Recently implant retained and implant supported overdentures are being used increasingly. For edentulous arches the choice for a fixed restoration or an overdenture depends on several factors; such as the quality and quantity of bone, the potential for oral hygiene procedures, the curvature of the arch, the amount and the nature of the attached tissues and the need to restore facial contours (Beumer et al. 1993). Phonetics and cost considerations are also important factors in differential treatment planning. Sadowsky (1997) developed a classification of implant supported/retained restorations for totally and partially edentulous arches:

2.2.6.1 Fixed Ceramometal Prosthesis

Fixed ceramometal prosthesis is similar in design to a conventional fixed prosthesis. They can be cemented to transmucosal abutments or can be screwed to gold cylinders. Generally recognised rules of fixed prosthodontic can be applied to implant retained fixed restorations. The choice of cementation versus screw retention seems to depend on the clinician's choice. There is no evidence that one method is superior to the other (Taylor et al. 2000). The fixed ceramometal restorations are mainly indicated in younger patients who exhibit less bone resorption and have a certain degree of attached keratinized tissue and capacity for performing oral hygiene procedures, as well as distally shortened dental arches.

2.2.6.2 Fixed Detachable Prosthesis:

Implant supported prosthetic treatment with fixed detachable prosthesis has been an integral component of the restorative therapy spectrum for years. Fixed detachable prosthesis consists of denture teeth connected to a metal framework in which the gold cylinders are incorporated. Gold alloy screws retain the restoration. With moderate to advanced jaw resorption, fixed detachable prosthesis can replace the lost soft and hard tissues. They offer high degree of retention.

Belser reports the advantages of a fixed detachable restoration as follows (Belser et al 1996):

- They can be removed at any time, which makes it easy to monitor mobility, probing depth, etc.

- In case of a failure (e.g. loss of an implant), a new implant can eventually be placed and the existing superstructure reused or modified to fit the new situation with minimum expense

- The remaining precision attachments can be used to anchor more conventional distal extension prosthesis

2.2.6.3 Fixed Removable Prosthesis

Rubeling (1982) reported a prosthetic design, named as “spark erosion” which is a combination of two technologies. Mainly this design is composed of bar and three frictional pins in the anterior segment of the bar and two swivel latches.

2.2.6.4 Overdenture Prosthesis

Implant supported / retained overdentures are discussed in the next section in detail.

2.3 Osseointegration

The concept of osseointegration is based on the studies undertaken by Per-Ingwer Brånemark in 1950s and the early 1960s. P-I Brånemark and co-workers at the University of Göteborg described a direct bone anchorage of a metallic implant as osseointegration (Brånemark et al. 1969) and documented the first clinical report (Brånemark et al. 1977). Many investigators have tried to document the exact structural relationship between implants and bone. This bony interfacial reaction reported by Brånemark was different from that with intervening fibrous tissue when a metal device was inserted in bone (Southan et al, 1970). The possibility of a direct bone anchorage, or in other words the histological evidence of osseointegration was not recognised until 1980s. The technical complexity of producing sections for transmission electron microscopy has been a severe restriction on determining the relationships of implant surfaces and bone (Kenny et al. 1993). However the term of osseointegration spread rapidly and has been used where there was an evident layer of fibrous tissue between bone and implant and renamed 'fibrous integration' or 'fibrous osseo-integration' (Albrektsson et al 1987). Schroeder, quite independently from Brånemark, demonstrated histologically for the first time a direct bone- to-implant contact in decalcified sections with pure titanium (Schroeder et al. 1976, 1978). And a few years later Albrektsson et al. published a clarification of the concept of osseointegration;

Osseointegration is a direct bone contact between a loaded implant surface and bone at the light microscopic level.
(Albrektsson et al. 1981).

However 100% bone connection to implant does not occur. Obviously an osseointegrated implant implies that most of the implant is anchored in bone tissue (Fig 9).

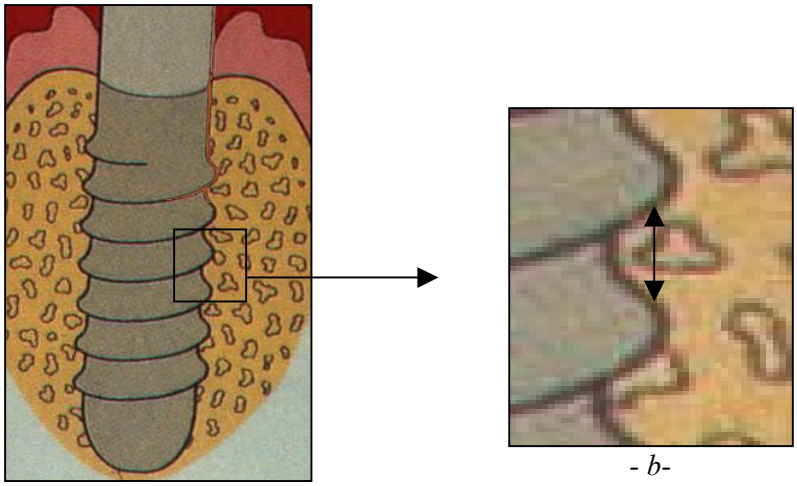

- b-

-a-

Fig 9: Osseointegration represents a direct bone to implant contact at the light microscopic level (a).
In spaces smaller than 100 µm complete bone growth does not occur (b).
(Adapted from Schroeder 1996)

Problems in identifying the exact degree of attachment for the implant have led to a definition of osseointegration that is judged by stability instead of histologic criteria. Osseointegration has been clinically defined as;

An induced healing process whereby asymptomatic rigid fixation of alloplastic materials is achieved and maintained in bone during long- term functional loading
(Zarb et al 1991).

The precise mechanism of osseointegration remains unknown although the physiology of bone healing is well documented (Dover 1999). The nature of the osseointegrated bone has been suggested to be related physical and chemical forces acting over the interface (Albrektsson et al 1983). However there is no evidence that play a dominant role in the strength of osseointegrated bond. The bond is in all probability predominantly biomechanical. The endosseous dental implants are placed surgically in the mature tissues and a sequence of cellular and molecular events is initiated as a response to trauma. The surgical placement of an implant into bone causes bleeding that is followed by an acute inflammatory response in adjacent tissues. As a general rule, proteins, lipids or other biomolecules are absorbed on the implant side and interfacial interactions develop in time. It has been demonstrated that there is a rapid ingrowth of blood vessels accompanied by both osteoclastic resorption and new bone formation, throughout osteoblastic activity (Schroeder & Buser 1996). The osteoblasts produce fibers that have the potential to calcify, and subsequently a fibrocartilaginous callus is developed. By the third week, this callus matures into woven bone. After seven weeks, lameller bone is being laid down. A great number of experimental studies have shown that this new bone is laid down directly upon the implant surface and there is a lack of connective tissue membrane around osseointegrated implants. This regenerated hard tissue is both qualitatively and quantitatively indistinguishable from the bone that has been formed if no implant had been placed.

The establishment of a reliable osseointegration is not only determined by factors relating to implant, but also to parameters such as surgical technique and loading conditions. Albrektsson et al. (1981) presented information on a series of background that needed control for a reliable osseointegration of an implant to ensue:

- *Biocompatibility of the implant material*
- *Macroscopic and microscopic nature of the implant surface*
- *The status of the implant bed in both a health (non-infected) and a morphologic (bone quality) context*
- *The surgical technique per se*
- *The undisturbed healing phase*
- *The subsequent prosthetic design and long-term loading phase. This reconciles considerations of design, materials used, location of implants, and anticipated loading, together with hygienic and cosmetic considerations.*

3. Treatment of Edentulous Maxillary Arches with Osseointegrated Implants

3.1 General Approaches

Today the number of edentulous patients within the societies is more prevalent than it has been for decades because of the increase in mean age. The dentists are more often faced with edentulous patients who have higher expectations in regards of esthetics, chewing, comfort and oral function. Conventional complete denture wearers often reported denture dissatisfaction implying uncomfortable and inefficient oral function leading to compromised nutritional status (Agerberg 1981, Ettinger 1973). The reported problems may be eliminated to a certain extend by the use of osseointegrated dental implants and the quality of life for many edentulous patients may be improved.

Osseointegrated implant treatment was originally designed for edentulous patients and the traditional concept "*ad modum Brånemark* " was based on the placement of four to six standard 3,75 mm titanium implants in a concentrated arrangement in the anterior-premolar region of the edentulous maxilla. After three to four month period of submerged healing, the implants were exposed and restored with screw- retained cantilever prosthesis. Rigid and accurate connections of a fixed prosthesis to several dental implants was thought to be more desirable, as the occlusal forces could be distributed rather than concentrating on a single implant. Adell reported impressive long- term results with this prototype (Adell et al, 1990). Although the fixed cantilever prosthesis was an extremely effective solution for the edentulous mandible, the success rate of its use in maxilla was less predictable. Concern was expressed in relation to loss of osseointegration due to overload in cantilever extension, economical, esthetical, and phonetical aspects and hygiene limitations of these prostheses. It has also been argued that the implant-retained prosthesis might be overloading the opposing edentulous arch, causing resorption (Davis 1990). In response to the special clinical and restorative requirements of the maxilla, many clinicians have advocated the use of removable, overdenture- type prosthesis for the treatment of edentulous maxilla.

“Spread- out Concept " is one of the clinical procedures introduced as an alternative to fixed full-arch restoration (Weber et al. 1992). According to this concept, it is suggested to distribute the implants along the edentulous arch; two placed in tuberosity region and four placed in the anterior-premolar region and then connecting them with a horse- shoe shaped bar. The clinical and experimental biomechanical studies have shown that the bar supported removable prostheses represent more favourable results than cantilever bridges, especially in respect to load distribution (Krämer 1992, Benzig 1995). This may be due to the avoidance of a cantilever extension. The distal support of the superstructure reduces the initial deformations and stresses. In addition to biomechanical favour, this concept demonstrates more patient comfort, aesthetics and hygienic procedures. But due to the anatomical limitations (such as sinus cavities) and residual ridge atrophy, it is not always possible to apply “Spread- out’’ arrangement of the six implants in the anterior, premolar and tuberosity regions. In such a case Schroeder and co-workers suggest the use of an overdenture supported by four implants instead of a cantilevered or an implant retained prosthesis (Fig 10).

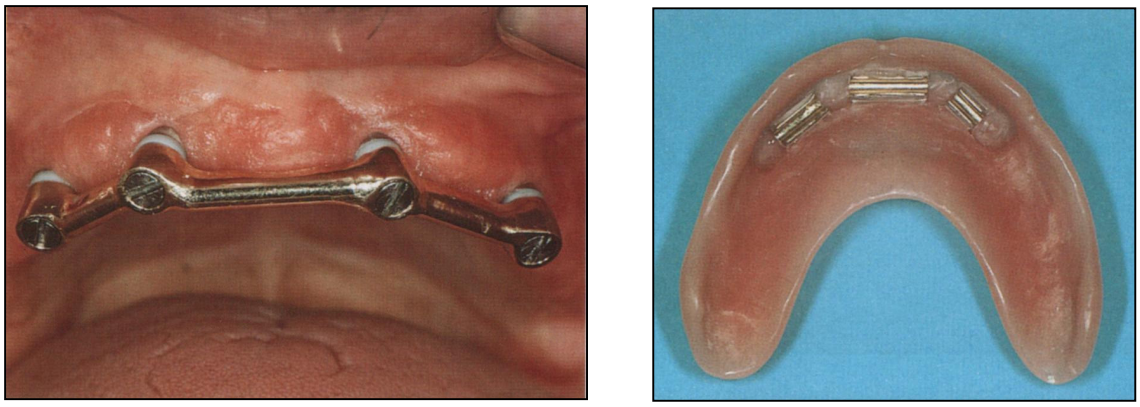

Fig. 10: A bar retained overdenture supported by four implants is a therapy alternative in edentulous maxilla.
(adapted from Schroeder, 1996)

The placement of four implants with minimum length of more than 6 mm and splinting them with a bar is reported to be an optimal treatment alternative in edentulous maxilla (Merickse-Stern et al. 1998). The implants are mostly located in the anterior part of the upper jaw, between the first premolars. In an article, in which Merickse-Stern discussed the use of ITI implants for prosthodontic rehabilitation in the completely edentulous arches, they have presented the overdentures as an adaptation of biomechanical and technical concept of fixed prosthesis, -

namely multiple implants and a rigid connection of the prosthesis to the implants (Merickse-Stern et al. 2000).

Spiekermann has developed a comprehensive treatment concept called "Aachener Concept" for the treatment of edentulous arches. He classified the therapy alternatives in edentulous maxilla and mandible, with slight differences, into 4 groups:

- Concept 1: Removable, implant- supported mucosa retained overdentures
  Two implants placed in anteriorly
- Concept 2: Removable, implant- supported mucosa retained overdentures
  Three – four implants placed anteriorly
- Concept 3: Removable, implant- retained cantilever prosthesis or bridge
  Four - six implants placed in incisors and premolar region
- Concept 4: Fixed (Screw retained), implant- retained cantilever bridge/prosthesis
  Six –eight implants placed in incisors, premolar and molar region.

Treatment of edentulous maxillary arches with osseointegrated implants is challenging for the clinician and presents inherent problems. When maxillary implant prosthesis is considered, many factors should be assessed in the examination, diagnosis, and treatment planning phases of management. Several long- term and short -term studies regardless of the prosthetic restoration have demonstrated lower success rate associated with fully / partly edentulous maxilla (Table 3). Higher failure rates in the maxilla are common to both fixed and removable prosthesis. According to these studies and several other studies that I have not cited, it can be concluded that an overall implant success rate of 82-87 % for maxillary implant can be achieved after about 5 years, whereas an overall implant success rate for mandibular implant is 91-95 %. It is also confirmed that the edentulous maxilla have almost three times more implant losses than edentulous mandible (Neukam & Kloss, 2002).

In the treatment of edentulous maxilla following criteria should be taken into account:

- Bone quality and quantity (Anatomical structures and degree of atrophy of the residual ridges)
- Prospective location of the implants and inclination of the implant axis
- Soft tissue contours and volume
- Facial morphology and maxillo-mandibular relationship

- Aesthetics
- Function and phonetics

Author	**Length of Study** (in years)	**No. of implants**	**Success Rate**
Adell et al (1981)	1-9	100	95,4 %
Albrektsson et al (1988)	1-7	2464	92,8 %
Enquist et al (1988)	0,3-5	191	69,6 %
Jemt (1991)	1	586	92,4 %
Jemt et al (1992)	1	430	84 %
Naert et al (1992)	6	304	94,1 %
Jemt (1993)	3	336	85%
Nevins & Langer (1993)	8	652	95,2 %
Jemt et al (1994)	5	449	92,4 %
Smedberg (1993)	2	86	86,5 %
Cune et al (1994)	2	106	71,7 %
Brånemark et al (1995)	10	476	78,6 %
Lekholm et al (1994)	5	220	92,3 %
Higucci et al (1995)	3	220	92,7 %
Buser et al (1997)	8	253	87,8 % (ant)
Buser at all (1997)	8	298	86,7 % (pos)
Becker et al. (1999)	6	70	82,9 %
Testori et al. (2001)	4	266	98,4 %
Davarpanah et al (2002)	5	707	97,2 %

Table3: Implant success rate in maxilla (regardless of prosthetic restoration)

3.2 Anatomical considerations

Because of the sufficient size of the denture bearing area and the absence of the major dislodging forces (e.g. the tongue), the maxilla has been regarded as the easier edentulous dental arch to treat with complete dentures. However this has not proved to be the case with implants. Maxilla presents different problems due to its morphology and configuration. Highly satisfactory success rate of osseointegrated implants in the treatment of edentulous cases depends upon achieving initial stability (Alberktsson et al. 1981). The fundamental factor for obtaining the initial stability is the bone quality and quantity in the recipient side. The unique anatomical aspects and bone quality of the edentulous maxilla appears to be not favourable in terms of osseointegration efficacy and efficiency.

3.2.1 Bone Quality in Maxilla

Bone tissue is organised macroscopically into cortical and trabecular structures. Cortical (compact) bone forms a dense surface layer, whereas trabecular (spongious or cancellous) bone forms a three- dimensional network below the cortex. Cortical bone has a higher modulus of elasticity than trabecular bone. In bone, where the trabecular density is low, it is difficult to obtain anchorage because of insufficient contact between the bone and implant side. The lack of cortical bone stabilization may lead to elevated micromotion shear forces at the interface (Standford & Richard 1999). Over a decade ago, Lekholm and Zarb developed a classification of jawbone condition to facilitate the planning of oral implants (Fig 11) (Lekholm & Zarb 1986).

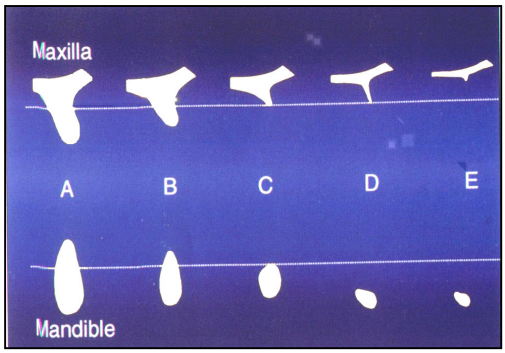

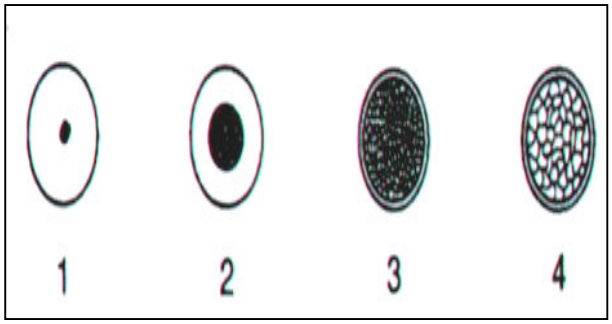

Fig. 11: Classification of jaw atrophy according Lekholm and Zarb (1986)

Quantity (shape):

A. *Unresorbed alveolar bone bone*
B. *Some resorption of alveolar bone*
C. *Complete resorption of alveolar bone*
D. *Some resorption of basal bone*
E. *Extreme resorption of basal bone*

Quality:

1. *Homogenous cortical bone, no cancellous*
2. *Thick cortex with dense cancellous bone*
3. *Thin cortex with dense cancellous bone*
4. *Thin cortex with low cancellous bone*

According to this classification, the arches with rating D and E for quantity and rating of 4 for quality present the greatest challenge to achieve a lasting result. It is sure that the condition of jaw bone various dramatically between the sides and between individuals, but generally in the maxilla Type 3 predominates in the anterior and premolar regions, whereas Type 4 in molar regions. In 1991, Jaffin and Berman emphasised the importance of the bone quality in implant survival (Jaffin & Berman, 1991). They have reported a high percentage of implant loss in bone with reduced structural quality and showed the correlation between the less dense bone and loss of implants. Subsequently some other studies confirmed that thin cortical plates and cancellous bone (characterising Type 4) has significantly lower success rate (Johns et al. 1992, Hutton et al 1995, Jemt et al 1996).

It is a great disadvantage of posterior maxilla, where occlusal loads are concentrated, that the thickness of cortical layer and the trabecular bone density is low. Because decreased bone strength is directly related to its density. Less dense bone and thin cortical layer are insufficient to withstand occlusal forces. In a numerical study, it was demonstrated that when the thickness of bone volume, especially the thickness of cortical layer decreases, the strains in bone increase (Del Valle et al. 1997). All these findings imply that the density and architecture of trabecular bone is crucial for the stability of implants in the alveolar ridge (Watzek & Ulm, 2002). In case of low density, some recommendations can be made to achieve optimal stabilisation:

- Precise surgical preparation of the implant side congruent to implant base with preservation of bone vitality is of great importance
- It is recommended to insert the implant in the apical region as a self- tapping implant. Application of heavy forces during implant insertion or cervical flaring (countersink) of the implant side should be avoided.
- The application of bone condensation techniques (such as Osteotomes Technique) can increase the percentage of bone to implant contact.
- The choice of the implant design should aim to increase bone-implant contact. Therefore, wide-diameter implants with rough surface are recommended. They increase not only the primary stability, but also improve the bone healing after the implant placement.
- Use of a longer implant allows engagement of the opposing cortical plate, a dense region providing implant immobilization during trabecular bone remodelling at the interface.

3.2.2 Bone Quantity in Maxilla

The maxilla contains the nasal and maxillary sinuses and has a close proximity to the incisive foramen. The maxillary alveolar process provides minimal support for the roots of the teeth. In a dentate upper jaw, this bone is rarely sufficient to enclose all the root surfaces. The roots of the incisors and canines protrude at the anterior maxillary aspect of the alveolar ridge. In this region, the cancellous bone of the alveolar wall continues to the thin compact bone of the nasal floor. Usually the floor of maxillary sinus lies below the level of nasal floor and is generally concave, having a smooth wall. The root tips of the first and second molars are located at the smallest distance from the maxillary sinus. Generally the vertical bone height in this region cannot provide a solid bulk of bone above the implants to resist the occlusal loading. Indeed, in many cases, the bone height in this region is not sufficient for an implantation. In a two-dimensional anatomic photoelastic study, Gross et al. has demonstrated the importance of sufficient apical bulk of supporting structures in producing a resistance and reactive force to axial pressure (Gross et al. 2001). Tooth loss, profound marginal periodontitis, trauma, and the increase in the size of the maxillary sinuses with the advancing age exaggerate the bone volume deficiency in the maxilla and complicate the rehabilitation of the masticatory function with endosseous implants in many ways. First of all, it is generally difficult to spread the implants along the maxillary arch (anterior- posterior spread design) for adequate cantilever extension to restore the posterior occlusion. This may preclude the use of a fixed edentulous restoration in the maxilla. Secondly in most edentulous maxilla, labial resorption of the alveolar bone necessities the restoration of proper lip contours with denture flanges. In addition, it is difficult to achieve esthetical results with fixed restoration unless maxillomandibular relationship is optimal.

3.2.3 Atrophy of the jaws

Following tooth loss the alveolar ridge is affected by an extensive and a rapid resorption. After an extraction, normally bone formation occurs at the bottom of the extraction socket while bone resorption is seen at the edge of the socket. Both of these sequences are continuing processes. The alveolar ridge atrophy patterns show difference between the maxilla and mandible (Fig 12).

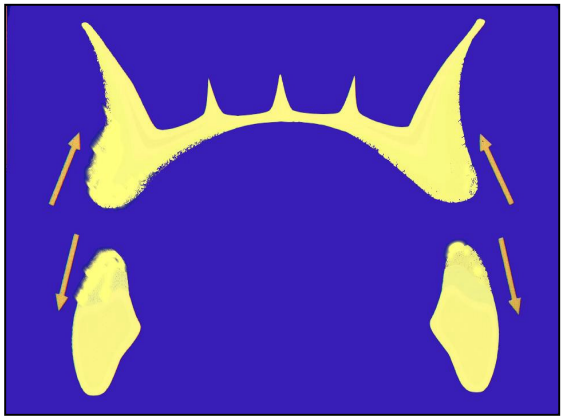

Fig12: Maxilla shows centripetal resorption
while mandible shows centrifugal resorption

In a three- dimensional analysis of maxillary jaws, Cawood and Howell found that a horizontal and a vertical resorption take place in whole maxilla (Cawood & Howell, 1988). As maxilla resorbs, the residual alveolar crest moves superiorly and medially. In many cases, in the posterior maxilla, bone can be reduced to a critical extend which finally leads to a thin layer of or even absence of bone forming the border to the sinus cavity (Type E or D). Beside the insufficient bone volume, severe alveolar atrophy often results in a residual ridge with decreased amount of cortical layer, too. A possible explanation for this might be that; after an extraction the cancellous content of the bone undergoes an intensive remodelling process. In addition, local mechanical and inflammatory factors and the type of prosthetic restoration used may also lead to reduction of cancellous bone in alveolar jaws. This cortical bone loss substantially reduces the stiffness of the bone implant system, leading to loss of osseointegration (Tepper et al 2002).

From a purely anatomic-topographic viewpoint, maxilla is a poor candidate for oral implants. Atrophy of the alveolar crest in horizontal and vertical dimension may limit the use of standard implants (implant length longer than 10 mm and diameter greater than 4 mm) and necessities either the use of shorter implants (anchorage of 6-7 mm) or the conditioning of the recipient side by means of surgical techniques. Although the reduced anchorage surface of the implants were tried to be improved by the use of ideal macro form and micro-morphological surface characteristics of the anchorage element, the literature provides significant evidence of a lower success rate for shorter implants. It is advised to use the shorter implants in combination with standard implants for support of implant-retained restorations.

3.3 Surgical techniques for overcoming compromised bone quality and quantity in maxilla

Patients suffering from hard and soft tissue deficiencies are invariably the most difficult group of patients to treat with osseointegrated implants. In upper jaw, the degree of atrophy and enlargement of sinus preclude conventional implant surgery and necessities advanced surgical techniques. Different bone regeneration techniques, ranging from local manipulation of tissues to extensive grafting with osteotomies and free vascularised tissue transfers, can be applied to overcome these anatomical difficulties.

A buccal deficiency at the recipient side or an alveolar ridge revealing knife- edge morphology or non space- maintaining defects usually requires a local alveolar ridge expansion procedure. In such cases, ridge- splitting (Engelke et al. 1997) or ridge- spreading (Netwing et al.1996, Renner et al. 1996) can be performed.

The management of osseous defects around implants (such as dehiscence, fenestration, or defects associated with periimplantitis) can be overcome by means of guided bone regeneration techniques (GBR). Since its introduction in late 1980s, it has been used to augment the localised alveolar ridge defects and/or severely resorbed jawbones in order to achieve adequate edentulous ridge morphology either for aesthetics and functional purposes or for subsequent implant placement. Barrier membranes are placed over bone defects to create a secluded space between the bone and membrane. Only osteoprogenitor cells from adjacent bone tissue allowing bone to regenerate in the defects can populate the space. Concern has been expressed in terms of loading capacity of the newly formed bone by GBR and complications associated with surgical procedures (likelihood of premature barrier exposure, insufficient gingival tissue to cover the wound or loss of vestibular bone). However a retrospective multicenter evaluation has clearly addressed the issue of successful long term loading (Nevins et al. 1998). Today GBR is accepted as a predictable treatment modality and being used on a daily basis (Tripple et al., 2000).

For reconstruction of a major osseous deficiency, the use of a barrier technique alone is not appropriate. Such a case requires the placement of bone grafts. The best grafting material is autogenous bone. Either the local supply in mouth or an extra-oral side such as iliac crest, tibia or cranium can be used as graft material. In 1980, Breine and Brånemark were the first to describe

onlay composite bone grafts for the reconstruction of the severely atrophic edentulous arches (maxilla/ mandible). They used autogenous, cortico-cancellous block tibial bone grafts secured with endosseous implants. The original technique was a two-stage procedure. As the bone grafts rapidly resorbed, modified the technique and used the lateral anterior iliac crest in one-stage reconstruction. This modified technique reduced the potential surgical morbidity and has been duplicated and modified by many other clinicians. Modification of the onlay grafts include the Sandwich osteotomies, onlay grafts in combination with hydroxyapatite augmentation, maxillary Le Fort I downgraft procedure with immediate implantation. Subsequently the basic autolougous onlay grafting principles were improved and autogenous inlay grafts (for a single tooth), veneer grafts (to augment a thin ridge), saddle grafts (to provide both height and width) and split grafts (one veneer on each side of the ridge) are being applied for reconstruction of dental arches in conjunction with implants. In an animal study, it has been shown that the newly grafted maxilla should remain unloaded for a period of 6 months to allow for the consolidation of the grafted bone and allow for revascularization of the bone graft in the grafted sites. Thereafter implants may be placed.

In an atrophic posterior maxilla, the vertical bone height (the available bone between the alveolar ridge and sinus floor) is usually insufficient for an implantation. The vertical deficiency should be corrected. The solution offered to counter this clinical problem is the raising and augmentation of the sinus floor referred as sinus floor augmentation (sinus lifting). Through a lateral window, bone substitutes or autogenous bone are deposited in the space bordered by sinus membrane craniobasally and the bony sinus floor caudally (Geiger&Pesh 1977, Tatum 1986, Misch 1987). Sinus lift is proven to be an efficacious alternative for the replacement of the missing maxillary posterior teeth in the partially edentulous arches with osseointegrated implants. In the past decade Osteotome Technique was described for localised sinus floor elevation to simplify the approach to the sinus by avoiding a lateral window (Summers 1994). The objective of this method was to preserve all the existing bone by minimizing or even eliminating the drilling sequence of the surgical protocol. As it is done through a crestal access, the amount of grafting material packed around the implant tips is generally limited and this technique is indicated only by local alveolar defects of maxilla with Class 3 and 4 bone qualities. In a study Stritzel et al. showed that the use of this method should be considered critically with respect to the bone quality; bone quality Class 1 and 2 are not suitable (Stritzel 2002). Although Summers reported 96 % success rate in low-density bone, the scientific data concerning the reliability of Osteotome Technique is lacking. No long- term or multicenter studies are reported till now.

Prosthetic rehabilitation of a patient with an extremely atrophic maxilla is a challenging procedure. As mentioned above, the rehabilitation of these patients requires a large autolougous onlay or veneer bone graft to the entire alveolar process, combined with sinus augmentation. Often a nasal floor augmentation is performed, too (Tripplett 2000). However some patients are medically unable to undergo a general anaesthesia and iliac harvest, or reject the advanced surgical procedures on the grounds of multiple surgical areas, longer healing times and a further extended period of implant placement and osseointegration, high cost, increased risk of intra-operative complications (Regev et al. 1995). All these anatomical insufficiencies and patient-related factors force the clinician to consider alternative treatments. In this setting, many authors suggested the placement of long implants in the maxillary tuberosity (Scortecci 1991, Bahat 1992, Tulasne 1992, Khayat & Nader 1994, Summers 1994, Benzig et al. 1995 Bahat 1992, Tulasne 1992). This approach can be united with a short, wide implant over the sinus to reduce the edentulous space and better distribute the occlusal forces.

3.4. Implant Use in Tuberosity Region

The placement of implants in the tuberosity region has enchanted the prognosis of implants placed in posterior maxilla. In 1989, Tulasne proposed the use of pterygo- maxillary bone mass for positioning dental implants (Tulasne 1989). Anatomically the posterior maxilla comprises the potions of three bones; the tuberosity of the maxillary bone, the pyramidal process of the palatine bone and the pterygoid process of the sphenoid bone (Fig 13). Depending on the anatomic structure that is engaged in the placement of the implants, the implants can be classified as follows:

a) Tuberosity implants
b) Pterygoid palate implants
c) Pterygo-maxillary implants

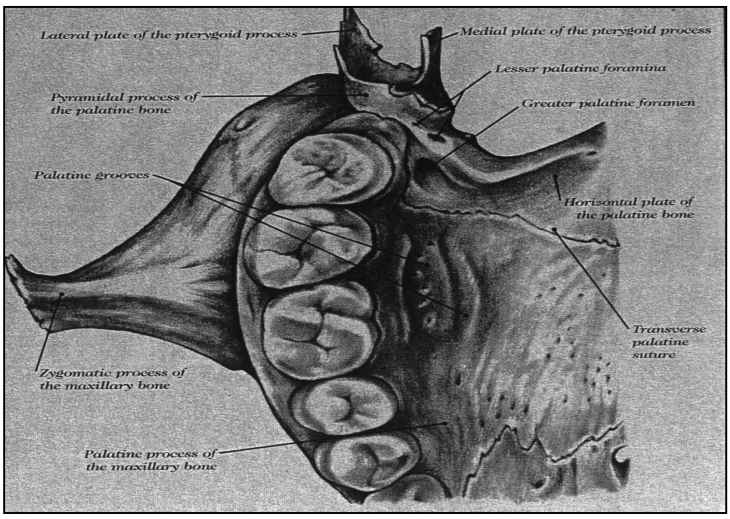

Fig 13: Anatomy of the tubero-pterygoid region.
(From: Sobotta Atlas of Human Anatomy, Vol.1, Head and Neck)

The maxillary tuberosity area is more and more involved in implant treatment planning. The dimensions and the quality of the tuberosity dictate the location of the posterior implant. The tuberosity is the posterior convexity of the maxillary alveolar ridge. Behind and slightly medial to the posterior tuberosity, located the pyramidal process of the maxillary bone and anterior-inferior surface of the pterygoid laminae of the sphenoid bone (Grant 1956). The bone in this region is of typical poor quality; the cortical layer is thin and irregular and usually merges into the cancellous bone with irregular distribution of lamellae. If the tuberosity is of favourable dimension- height, width and length, an implant may be successfully placed within this structure and a more distal placement of the implant apex can be avoided. The decisive factor in anterio-

posterior angulation of the implant is the angle of the posterior wall of the maxillary sinus, because the implants are placed parallel to the posterior wall of the maxillary sinus. Generally the angulation of an implant in tuberosity is less than 30° in respect to the occlusal plane.

Surgical placement of a maxillary tuberosity implant can be performed in different ways. The early suggestions were based on implant placement according to the standard protocol (Bahat 1992, Balshi 1995). In a retrospective study, Bahat studied 45 patients rehabilitated with maxillary tuberosity implants for an average of 21, 4 months (Bahat 1992). He reported 93% success rate. Subsequently Balshi reported a success rate of 82,3 % (Balshi 1995). In order to reduce this high failure rate for maxillary tuberosity implants, some modifications have been made in classical surgical protocol. Venturelli suggested a protocol that adapts the classical technique to the particular anatomical side, and reported a survival rate of 97, 6 for 42 implants observed for a mean period of 40 months (Venturelli 1996). Valeron described a simplified technique for implant placement in this region, in which the use of drills is reduced to minimum, thus conserving bone (Valeron 1997). He reported a survival rate of 93, 5 for a total number of 31 implants placed in the pterygomaxillary- pyramidal region. The implants in this study were in function for more than 15 months to over 3 years. Noccini et al described a technique for placement of implants according to the Ridge Expansion Osteotomy procedure performed with modified osteotomes, and concluded that if an optimised surgical protocol is used, the success rate of implants in maxillary tuberosity is comparable to other areas of the oral cavity (Noccini et al. 2000). In none of these studies early or late complications related to surgical procedures were reported. From a surgical point of view, implant placement in tuberosity is a safer alternative to sinus lift procedures or other advanced surgical approaches. Furthermore, nearly in all studies, the tuberosity implants were demonstrated to have more favourable success rates than the implants placed in any region in maxilla.

4. Biomechanical Considerations

Long- term favorable results by implant-supported restorations can be achieved only when the implant- bone interface is maintained. Several studies have illustrated that the implant failures are contributed to plaque induced periimplantitis and/ or mechanical overload (Rosenberg et al. 1991). The critical factor in avoiding the overloading of an osseointegrated implant is the manner in which the mechanical stresses are transferred from the implant to bone and which effects they have on the surrounding tissues. In other words, the key biomechanical factor is the ability of interfacial tissues to support masticatory forces for a long period of time. Therefore, understanding the interrelationship of the forces acting on implants, the force transmission to surrounding bone and the responses of the interfacial tissues is essential in ensuring the osseointegrated complex's survival.

4.1 Force Distributions by Natural Teeth

The implants and the natural teeth anchorage differently in bone. A connective tissue layer, called periodontium, which lacks by an osseointegrated implant, surrounds a natural tooth. The periodontal ligament dominates the biomechanics of normal teeth. The natural tooth adapts itself to different loading conditions through deflection that stems from the deformation of periodontium and alveolar bone. When a natural tooth is loaded, it shows physiologic micromovements in horizontal and in vertical direction as a result of the periodontal membrane's resiliency. The resultant movement is greater in horizontal direction than vertical. The vertical movement is a bilinear intrusive displacement with two phases. The magnitude of the initial stiffness (about 0,2 N/µm) is smaller than second- stage stiffness (about 3 N/µm). This secondary phase of tooth mobility determines the intrusion ratio of teeth during chewing. During mastication dynamic loads lead to impact forces on tooth. Such an impact force application significantly suppresses the initial phase of intrusion and dominates the effect of second phase of displacement (Richter 1986). This diminished tooth mobility is similar to decreased implant mobility. From this point of view, the anchorage of implants and natural teeth are biomechanically similar under chewing conditions (Richter 1992).

When a force is applied to a natural teeth or a teeth supported restoration, the force is resolved into vertical and horizontal components. A vertical occlusal force produces a resultant line of force that has a center of rotation located in the apical third of the root. The micromovement of the periodontal ligament allows the distribution of force along the root surfaces around the center of rotation in the apical third (Weinberg 1993).

4.2 Biomechanics of Implant- Bone Connection

As mentioned above, the mechanical loading condition is among the most important factors for the preservation of implant- bone interface. The animal experiments (Isidor 1997, Hoshaw et al 1994, Barbier & Schepers 1997) and clinical studies (Glantz et al. 1993, Merickse- Stern et al. 1996) have shown that the implant failures in the absence of plaque-related gingivitis might be related to disequilibrium of forces acting on implants. In a retrospective study, designed to verify the implant failures in maxilla, it has been demonstrated that where loading problems were present, the failure rate was three times more than the situations with better loading conditions (Ekfeld et al, 2001).

4.2.1 Maintenance of Implant Interface

Long- term success of osseointegration can be maintained only through dynamic modeling and remodeling. Although the precise mechanisms are not fully understood, it is believed that there is an adaptation mechanism of the bone to loading. Von Meyer, Roux, and Wolf were among the early investigators who recognized the relationship between tissue loading and adaptation (Roux 1881, Von Meyer 1867, Wolf 1986). After implant placement, a complex series of wound healing steps lead to the initial formation of a stable interface (Standfort & Richard 1999). How osseous tissue responds to biomechanical forces is referred as “mechanotransduction”. According to this mechanostat theory, bone is maintained when the forces acting on it are in equilibrium (Frost 1987). A dynamic modeling and remodeling process is observed around the implants. The forces transferred from the implant to the surrounding bony structures are thought to provide the stimulus that result in either remodeling or modeling. Modeling refers to any net change in bone shape whereas remodeling refers to the continuous turnover of bone without a net change in shape or size (Standfort 1999). This adaptive capacity creates a biological interface capable of

withstanding the variations in clinical conditions. In case of mastication, in other words in case of repetitive loading, the fatigue damage in forms of micro cracks will occur within the bone. It has been reported that the primary function of bone remodeling is the repair of this fatigue damage (Van Oosterwyck et al 2002). While the osteoclasts resorb the bone tissue containing bone cracks, the osteoblasts form new bone matrix and refill the resorption spaces. When the occlusal forces acting on the implants are within the physiologic limits, this adaptive process will promote the integrity of osseointegration. But when excessively high dynamic implant loading occurs (over 4000 microstrains), it may lead to higher stresses and strains gradients in bone that exceed the physiologic tolerance threshold of bone (Sahin et al. 2002). This results in marginal loss or even complete loss of osseointegration (Van Oosterwyck et al 2002, Ducky et al 2000). In addition, it has been experimentally and clinically demonstrated that excessive dynamic loading may also decrease bone density and lead to crater-like defects (Roberts 1993, Duyck etall. 2001). On the other hand, the forces below the optimum range can also lead to osseointegration loss. Extremely low intraosseous strains (below 100 microstarins) cause bone resorption due to disuse atrophy. It is essential that neither implant nor bone be stressed beyond or under the long- term fatigue capacity.

Implant surface characteristics have crucial effect on managing osseointegration. The combination of macroscopic levels of implant design with microscopic architecture of titanium surface diminishes the effect of shear strains acting on the interface. Increased surface roughness balances bone apposition and remodeling. This may be due to the increased surface area used to transfer occlusal forces to bone. Furthermore rough surfaces provide better mechanical interlock compared to machined surfaces by allowing bone ingrowth into the roughened surfaces (Buser et al. 1991, Buser et al. 1998).

4.2.2 Occlusal Forces in Patients Treated with Osseointegrated Implants

Occlusal forces are high load magnitudes with high frequency but short duration. Bite forces vary greatly between individuals and different regions of the dental arch. It is known that patients without implants or dentures have vertical component of bite forces ranging from 100 N to 2400 N (Brunski 1992). Patients with natural dentition have 5-6 times higher bite forces than complete denture wearers (Haraldson et al. 1979). Patients with implant supported fixed prostheses have a masticatory muscle function approaching to that of patients with natural dentition (Haraldson et al.1979 (a)). The average biting force by implant patients is reported to be 50 N during chewing

and maximal bite force to be 145 N. Axial force component tend to increase distally in mouth. Molar bite-forces exceed four times the magnitude of bite-forces exerted in the incisor region. This may be explained with class 3-lever concept. According to this model, forces will be larger if they act nearer to the fulcrum. When this model is adapted to mastication, the fulcrum is the temporomandibular joint and the forces acting posterior are to have be greater magnitude than anterior forces. In short: the exact value of axial component depend on location of force application in mouth, nature of the food, chewing/swallowing and patient related variables, such as age, gender, mental condition.

4.2.3 Force Transmission from Implants to Bone

The absence of periodontal ligament around the dental implants influences the stress distribution in surrounding bone. The osseous interface of a dental implant responds in a viscoelastic manner to loading. A dental implant shows deflection determined only by the deformation of alveolar bone and the deflection of an implant is to be 10-100 times less than the deflection of a natural tooth. This fixed connection between an implant and bone may lead to bone resorption and subsequently loosening of the osseointegration, as the implants tends to transmit, and distribute greater stress to adjacent bone (Ney 1987, Ney & Schulte 1988).

Forces acting on dental implants are referred as vector quantities; they have magnitude and direction. When a force applied to an implant supported prosthetic restoration, it is first introduced to the prosthesis, then reaches the bone- implant interface via implant.

There are several factors affecting loading on dental implants:

- Magnitudes, directions, and location of applied occlusal forces on the prosthesis (Assif 1996, Barbier et al 1998, Hobkirk et al 1998).
- Type, geometry, and rigidity of prosthesis (Jemt et al 1991 (a), Hobkirk et al 1998, Ster. 1998).
- The nature of the connections between the restoration and the implant.
- The number, location, angulations, geometry, length and diameter of the implants.
- The mechanical properties of the implants and prosthesis.
- The stiffness of the implant interface.
- Condition of the opposing arch (natural dentition/ prosthetic restoration).
- Functional jaw and skull deformation (Skalak 1983, Weinberg 1993, Benzig 1995)

- Quality of the available bone (Holmes et al 1997).
- Type of food.

When an implant is subjected to load, due to the inclined surfaces of the restorations and teeth, the forces can be resolved into components: vertical components, precisely parallel to the long axis of the implant, and horizontal components, in the plane of prosthesis (Fig 14). It has been shown that the horizontal forces are up to about one- tenth of vertical forces (Brunski 1988). It is generally accepted that the vertical forces are better tolerated than the lateral force (Weinberg 2001). While the vertical forces act in one direction the horizontal forces act in two directions; bucco- lingual and mesio- distal.

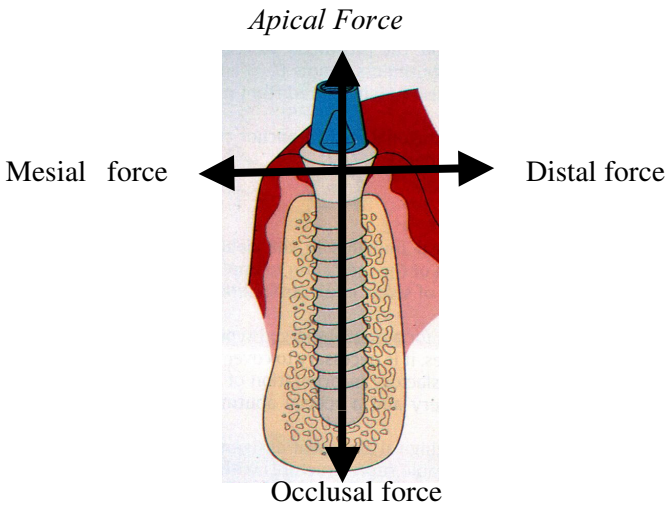

Fig 14: Graphic representation of the forces acting on osseointegrated implant.

When an implant is loaded, as stresses occur within the load-bearing system (implant and restoration), reactive stresses occur within the surrounding bone. These stresses are same in magnitude but opposite in direction. The resultant force of these stresses should counter balance in order to maintain the static equilibrium. The stress concentrations occur where the implant and bone first come into contact. They are in “V” or “U” shape in form, with greater magnitude at the crestal 5 mm of the interface, having minimal distribution to the apical third (Bidez & Misch 1992).

The stresses in bone create tensile, compressive, and/or shear forces at the interface (Fig 15). Interfacial loads to an implant should be compressive in nature, as compressive forces tend to maintain the integrity of bone-implant interface (Misch 1999). Tensile forces have an opposite effect. They tend to distract the interface. When bone is subjected to tensile loading, the strength of the bone decreases approximately 30%, in shear loading 65% (Reilly 1975). This means that the higher the shear component, the greater the risk of a failure. The destructive effect of shear forces is higher by implants, as the implants do not have periodontal ligament. The periodontium acts as an effective shear transfer layer and minimize the stress concentrations in the socket wall (Brunski 1992).

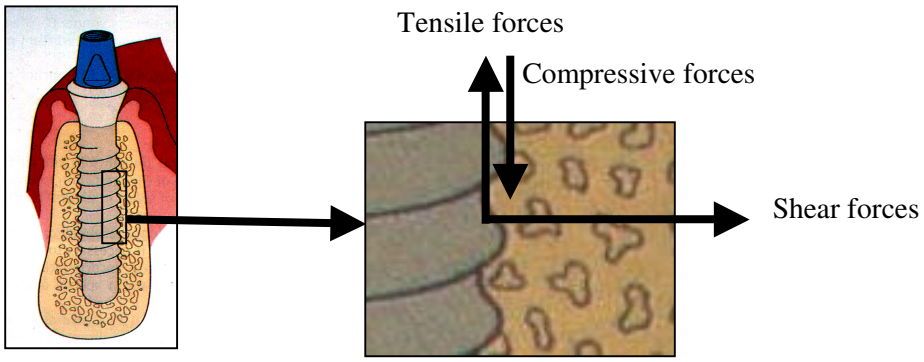

Fig 15: Compression and Tension forces act perpendicular to the surface of the implant. Shear forces act parallel to the surface.

During the transmission of forces from dental implant to surrounding alveolar bone, lateral component of force creates bending moments. Bending moment (torque) is defined as the force multiplied by the perpendicular distance from the centre of rotation that located at the crest of ridge. As a result, the torque is concentrated at the crest of ridge rather than distributed along the surfaces of the implants as it is in natural teeth. The magnitude of the bending moment decreases with increasing distance to the point of load application (Duyck 2000). These bending moments result in more stress than axial forces and create destructive effects on the implant cross section at the crestal bone level, causing complications associated with implant loosening or fractures (Rangert et al 1997 (a), Kohavi 1995, Cehreli et al 2002). Bending moments can be reduced on the implant by creating true cusp-to-fossa relationship and/or decreasing the inclination of the cuspal contact of the opposing teeth. This underline the need for optimal prosthesis design for implant retained reconstructions.

The stresses in bone create tensile, compressive, and/or shear forces at the interface (Fig 15). Interfacial loads to an implant should be compressive in nature, as compressive forces tend to maintain the integrity of bone-implant interface (Misch 1999). Tensile forces have an opposite effect. They tend to distract the interface. When bone is subjected to tensile loading, the strength of the bone decreases approximately 30%, in shear loading 65% (Reilly 1975). This means that the higher the shear component, the greater the risk of a failure. The destructive effect of shear forces is higher by implants, as the implants do not have periodontal ligament. The periodontium acts as an effective shear transfer layer and minimize the stress concentrations in the socket wall (Brunski 1992).

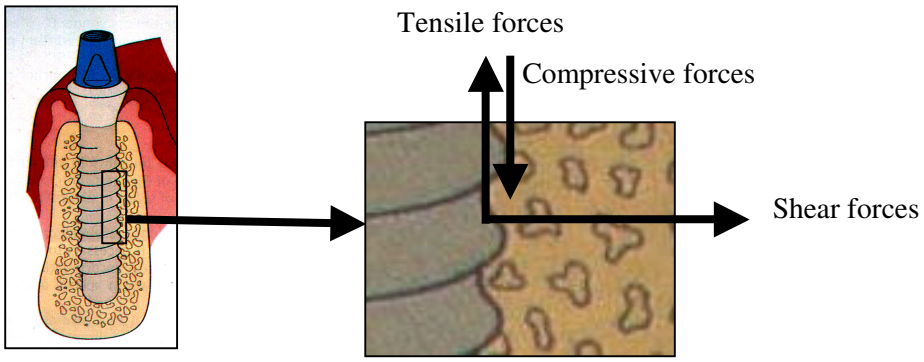

Fig 15: Compression and Tension forces act perpendicular to the surface of the implant. Shear forces act parallel to the surface.

During the transmission of forces from dental implant to surrounding alveolar bone, lateral component of force creates bending moments. Bending moment (torque) is defined as the force multiplied by the perpendicular distance from the centre of rotation that located at the crest of ridge. As a result, the torque is concentrated at the crest of ridge rather than distributed along the surfaces of the implants as it is in natural teeth. The magnitude of the bending moment decreases with increasing distance to the point of load application (Duyck 2000). These bending moments result in more stress than axial forces and create destructive effects on the implant cross section at the crestal bone level, causing complications associated with implant loosening or fractures (Rangert et al 1997 (a), Kohavi 1995, Cehreli et al 2002). Bending moments can be reduced on the implant by creating true cusp-to-fossa relationship and/or decreasing the inclination of the cuspal contact of the opposing teeth. This underline the need for optimal prosthesis design for implant retained reconstructions.

4.3 Biomechanics of Implant- supported Restorations

It is know that the restoration of edentulous arches with osseointegrated implants is difficult and complicated. Careful prosthetic planning and consideration of natural and occlusal forces are essential in achieving optimized biomechanical conditions in the implant-supported restorations (Rangert et al 1997). The factors affecting load distribution are listed above. All these factors are interrelated and each has an accumulative effect on the collective whole.

Since the maxillary edentulous arches often have inadequate bone structure and show advanced atrophy, implant retained overdentures are the choice of treatment. Compared with fixed-implant retained prosthesis, they have been associated with more mechanical and biological problems (Jemt et al. 1992, Jemt et al. 1993 (a)). Force application on an overdenture resulted in lower compressive loads, but higher bending moments on implants than fixed restorations (Jemt et al. 1991 (a)). This may be due to the prosthesis design. The functional loads are transmitted to surrounding bone via anchorage devices. In an *in-vitro* study, it has been demonstrated that the strain values measured under the overdenture depends upon the type of connectors (Jäger et al, 1993).

A variety of bars and individual attachments providing different type of retention mechanism are being used to anchor overdentures to implants. As individual attachments: ball anchors, rigid telescopic copings, non-rigid telescopic copings, magnet attachments can be named. The bars can be classified as round bars, Dolder joint bar (egg-shaped) and rigid bars (U-shaped) and may be with/without distal/mesial extensions. Ball anchors and bar attachments distributes the reactive forces differently (Menicucci et al. 1998). The ball anchors, round bars, and Dolder joint bar provide movable retention, while the U-shaped bars provide rigid retention. Therefore choice must be made as to type of attachment and function (movable/rigid retention). It is suggested to use rigid retention elements (U-shaped bars) when advanced ridge resorption is present. However there are no scientifically based facts indicating which attachments system is to be preferred in specific situations.

Bar attachments are mainly indicated severely atrophied maxilla and mandible. The transmission of axial loads from a bar-retained construction depends upon the number, position, and angle of implants, and the alignment of them within the dental arch. The implants should be evenly

4.3 Biomechanics of Implant- supported Restorations

It is know that the restoration of edentulous arches with osseointegrated implants is difficult and complicated. Careful prosthetic planning and consideration of natural and occlusal forces are essential in achieving optimized biomechanical conditions in the implant-supported restorations (Rangert et al 1997). The factors affecting load distribution are listed above. All these factors are interrelated and each has an accumulative effect on the collective whole.

Since the maxillary edentulous arches often have inadequate bone structure and show advanced atrophy, implant retained overdentures are the choice of treatment. Compared with fixed-implant retained prosthesis, they have been associated with more mechanical and biological problems (Jemt et al. 1992, Jemt et al. 1993 (a)). Force application on an overdenture resulted in lower compressive loads, but higher bending moments on implants than fixed restorations (Jemt et al. 1991 (a)). This may be due to the prosthesis design. The functional loads are transmitted to surrounding bone via anchorage devices. In an *in-vitro* study, it has been demonstrated that the strain values measured under the overdenture depends upon the type of connectors (Jäger et al, 1993).

A variety of bars and individual attachments providing different type of retention mechanism are being used to anchor overdentures to implants. As individual attachments: ball anchors, rigid telescopic copings, non-rigid telescopic copings, magnet attachments can be named. The bars can be classified as round bars, Dolder joint bar (egg-shaped) and rigid bars (U-shaped) and may be with/without distal/mesial extensions. Ball anchors and bar attachments distributes the reactive forces differently (Menicucci et al. 1998). The ball anchors, round bars, and Dolder joint bar provide movable retention, while the U-shaped bars provide rigid retention. Therefore choice must be made as to type of attachment and function (movable/rigid retention). It is suggested to use rigid retention elements (U-shaped bars) when advanced ridge resorption is present. However there are no scientifically based facts indicating which attachments system is to be preferred in specific situations.

Bar attachments are mainly indicated severely atrophied maxilla and mandible. The transmission of axial loads from a bar-retained construction depends upon the number, position, and angle of implants, and the alignment of them within the dental arch. The implants should be evenly

distributed over the dental arch. When a restoration is retained by a bar attachment, the primary stability of the abutment and the splinting of the implants are gained. In an retrospective study designed to determine the periimplant health around the splinted and non-splinted implants supporting overdentures, it has been demonstrated that there is an increased possibility of periimplant bone loss when the implants are not splinted (Narhi et al 2001). The distinguishing feature of a bar design is that it allows a certain amount of prosthesis rotation under functional loads. Rotation of a denture is a protective feature that prevents torque forces on the implants. But when limited number of implants (especially two or four) is used to support an overdenture in maxilla, the bar causes a “mechanical ridge effect” so that the overdenture is not displaced anteriorly, posteriorly, or laterally. This may lead to overloading of the implants (Clepper 1999). Experience of the various clinicians has shown that implants have a lower success rate when a bar retained restoration is supported with four or less than four implants in edentulous maxilla. Six implants is the optimal number for support in the edentulous maxilla. The less the number of implants in edentulous maxilla, the lesser retentive is the prosthesis and the more loaded the implants, since the abutments can offer little resistance to lateral forces. Therefore the bar and retentive clips must be so designed that they allow for a passive rotation and the lever arm should be kept as short as possible (Lewis 1993). In this case, from a biomechanical point of view, a “spread-out arrangement” of the implants in the maxilla is advisable. Six implants, (two of them placed in the tuberosity region, and four placed in the anterior region) connected with a bar will reduce the initial deformations and stresses in bone. The appropriate distance between the implants and the distal-end support will decrease the bending moments acting on the implants (Benzig 1995). Therefore in this study, in order to evaluate the exact effect of implant tilting on stress distribution, a spread-out arrangement is used, since it is accepted as the optimal prosthetic planning in edentulous maxilla.

5. Finite Element Analysis in Dentistry

The stress distribution of forces in peri-implant bone has been investigated by various methods; such as photoelastic model studies, strain gauge analysis on physical models and/or 2-3 dimensional finite element model analysis (FEA) (Gross et al. 2001, Jäger et al 1993, Lenz et al 2001, Kawasaki et al 2001, Williams et al 2001, Kenney&Richards 1998). The photoelastic modeling technique has been used to predict various biomechanical aspects of implants and implant supported prostheses. In a photoelastic model study, it is possible to simulate the implants in bone and the shearing stresses within the loaded model. Furthermore the use of such a numerical method can provide relevant information (Brosh et al 1998). But generally this technique uses a two- dimensional model that does not consider the geometry of the jaws. In order to measure the force transfer to the bone, an optimum model simulating the complex structure of the skull is necessary. One disadvantage of the technique is that the normal stresses within the material simulating the bone cannot be detected. The most important insufficiency of it is that an isotropic photoelastic material simulates an orthropic material (bone).

Another method investigating the stress distribution in bone uses the strain gauge transducers. The strain gauge analysis can be used to measure relative forces on restorations connected to implants. It simulates the complicated restorations, e.g. entire jaw loading when the restoration is supported with several implants. Implementation of the technique requires substantial modification of materials tested for placement of gauges. But when it is compared with photo-elastic model method, it has a priority; it provides additional experimental information, such as stress type and strain qualification. But like in photoelastic model, with the strain gauge transducers it is impossible to simulate the 3- dimensional complex structure of the jaws. In a study Brosh has demonstrated that both of these techniques should be regarded as complementary methods (Brosh et al. 1998). When the system geometry and the mechanical properties of biologic tissues should be applied in the experiments, the finite element models should be used.

Distributions of strains and stresses can be measured from a solution of equilibrium equations together with applied loads and constrains. However the complexity of the implant- bone system and properties of bone precludes using a technique that can be optimized to yield accurate approximations of exact solutions. The alternative numerical method is finite element method (DeTolla et al. 2000). Finite element analysis (FEA) is a technique for obtaining a solution to a complex mechanical problem by dividing the problem domain into a collection of much smaller and simpler domains in which the field variables can be interpolated with the use of shape functions (Geng et al. 2001). It was initially developed in the early 1960s to solve the structural problems in the aerospace industry. In 1976 Weinstein has used for the first time FEA in implant dentistry (Weinstein et al. 1976). Thereafter FEA was rapidly applied in dentistry studies to calculate the stress distributions in single tooth implants (Atmaram & Mohammed 1983-1984, Atmaram & Mohammed 1983-1984 (a), Mohammed et al. 1979), porous rooted dental implants (Cook et al.1982), cylindrical implants (Meroueh et al 1987), cantilever prostheses or implant-tooth retained prostheses (Akpinar et al. 1996).

Stress distribution in bone correlated with implant-supported prosthesis design has been investigated by means of two-dimensional (2-D) and three-dimensional (3-D) finite element analysis. Whereas 2-D FEM is a simple and schematic model and usually used for preliminary qualitative analysis, 3-D FE model is used for detailed qualitative analysis of the interaction between implant, tooth, ligament and bone. Studies comparing the accuracy of these, demonstrated that with a 3-D modeling detailed information about stress distribution in bone can be gained (Simon et al. 1977, Ismail et al. 1987). When 3-D FEA are compared with in vivo strain gauge measurements, the results of 3-D FEA also matched the clinical results (Benzig et al. 1995, Benzig et al 1996). Another advantage of a FEA model is that it is a mathematical model of the real object and/or phenomenon. A mathematical model can have enormous advantages over *in vivo* testing. First of all, a mathematical model is virtual and exists in the computer. It is completely controllable. The researches can easily change the test conditions, the model parameters and geometry, can simulate the desirable responses and can repeat the test simulations at any time. Therefore a well-tested and verified mathematical model provides the researches with a very powerful tool for analysis (Menicucci et al. 2002).

In literature although there is a great number of studies that investigated the stress distribution in mandible, there are limited FEA studies of maxilla. And nearly in all of the studies, block-shaped models simulating solid cortical bone in uncomplicated anatomies and geometry were used. The importance of an anatomical model was demonstrated in a study (Gross et al 2001). Different patterns of stress values and magnitude were calculated around the maxillary implants when an anatomical and a non-anatomical model were used.

Because of the reasons explained above, in this study an anatomical 3-D model of an atrophied maxilla was used to examine the stress and strain distribution around the inclined implants in maxilla. The model used in this study is described in Chapter 6 Material & Method.

6. Material & Method

In this study, a 3- dimensional finite element model was used to examine the effect of implant tilting on stress distribution in an atrophied maxilla. The finite element model of the present study was derived from a model whose geometrical data are based on the "Visible Human Project". University of Karlsruhe, Institute for Mechanic, Biomechanical Research Group (Head: Dr. rer. nat. Jürgen Lenz), further developed the skull of the "Visible Human Project". A detailed description of the model can be gained from the institute (Forschungsgruppe Biomechanik Fakültat für Mathematik Universitat Karlsruhe (TH), Englerstr.2 D-76131 Karlsruhe Germany). The 3- dimensional anatomical model of the maxilla used in this study was gained by reducing the alveolar bone height in posterior (especially in tuber region) of the original model of the institute, in order to represent an atrophied jaw.

6.1 Model Design and Implant Dimensions

The effect of implant tilting on bone loading was studied for cylindrical Ti implants placed in maxilla in spread-out configuration. Three implants were placed in the lateral incisor region, second premolar region and tuber region symmetrically. Then the implants were connected with a horseshoe shaped bar (Fig 16). The superstructure was identical in geometry in each model to allow for comparison of the results. The implants in tuber region were tilted with different angles in respect to occlusal plane (20°, 25°, 30°, 35°, 40°) (Fig 17). Other implants in the anterior and premolar regions were so placed that the axis connecting them was parallel to the terminal hinge axis. In the present study three different implant configurations (diameter/length) were modeled. A detailed description of the models used in this study varying according to implant diameter and inclination is given in Table 4. The height of the abutments was 3,5 mm. Implant and abutment dimensions were based on the dimensions of commercially available ITI-System implants, but the geometry of both components was simplified to that of a cylinder. A comprehensive structural modeling of the implant collar and surface was not included.

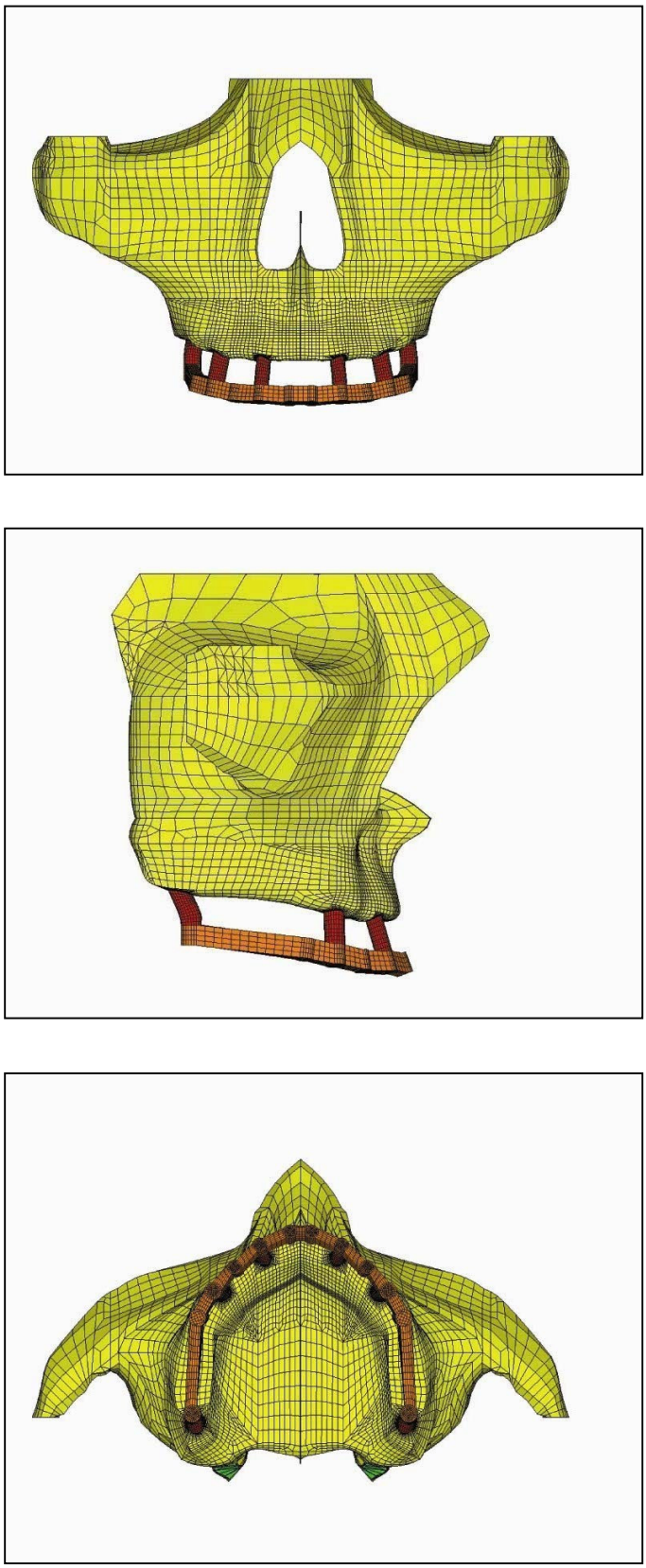

Fig 16: Three-dimensional finite element model of the edentulous maxilla, implants and superstructure. The first figure shows the frontal view of the model, the middle figure shows the mesial view, and the lowest shows the :occlusal view.

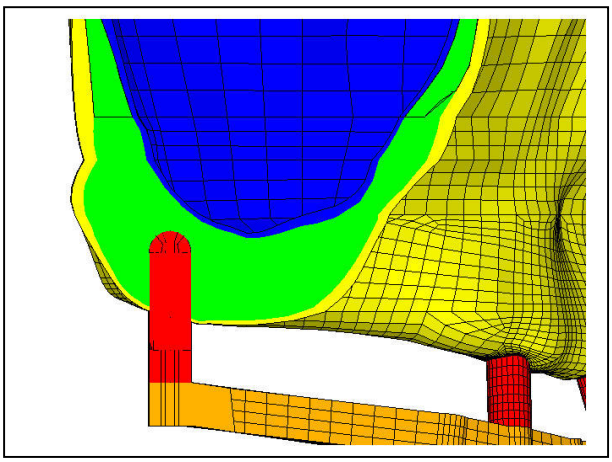

Model 1 (perpendicular placed implant)

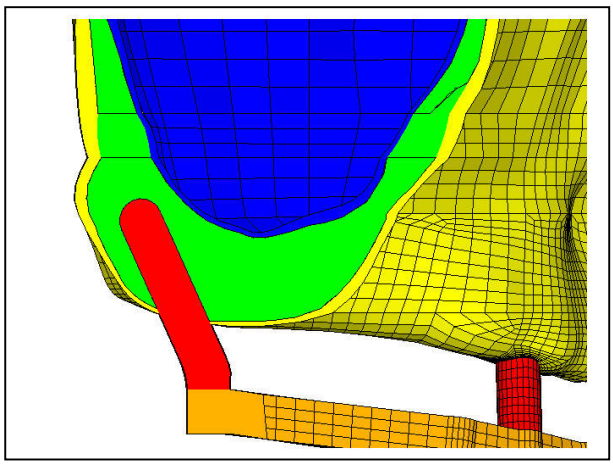

Model 2 (20° tilted implant)

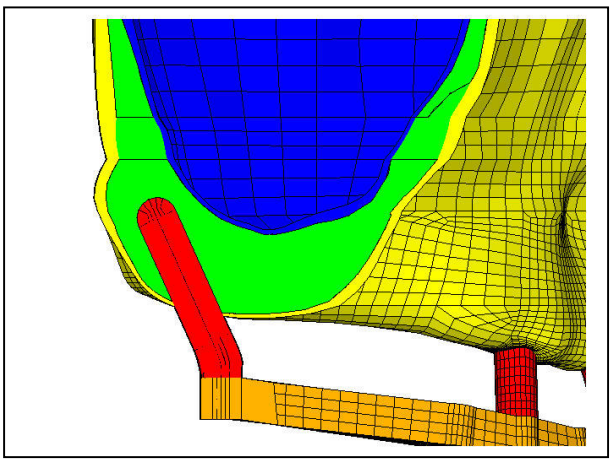

Model 3 (25° tilted implant)

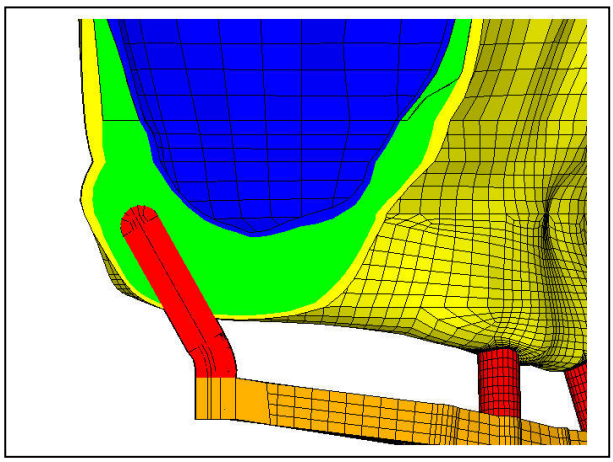

Model 4 (30° tilted implant)

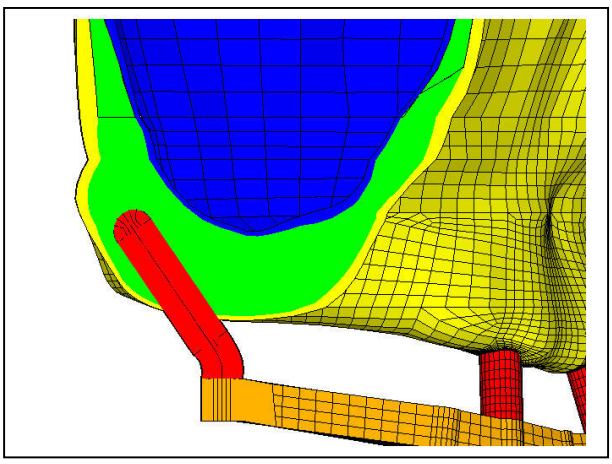

Model 5 (35° tilted implant)

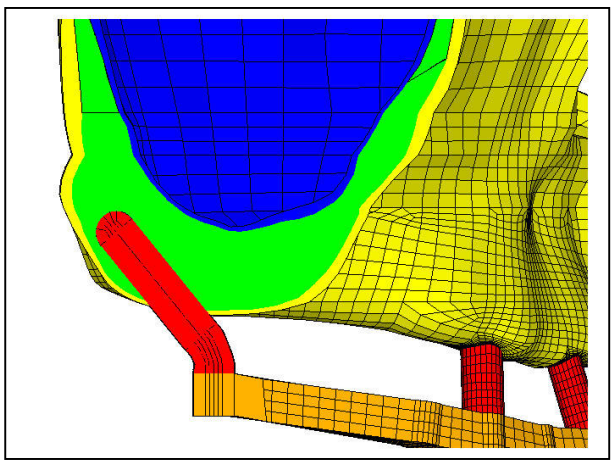

Model 6 (40° tilted implant)

Fig 17: The tuber implants were tilted with different angles (20°, 25°, 30°, 35°, 40°) (cross-sectional view) (The anatomical structures are color-coded; blue: maxillary sinus, yellow: cortical bone, green: cancellous bone, red: titanium implants, orange: bar superstructure)

	REGIO O12, 014		TUBER REGION	
	Imp. Dimensions	Imp. Config.	Implant Dimensions	Implant Configuration
MODEL 1	4,0 mm / 10 mm	perpendicular to horizontal plane	4,0 mm / 8 mm	Perpendicular to horizontal plane
MODEL 2	4,0 mm / 10 mm	perpendicular to horizontal plane	4,0 mm / 12 mm	20° tilted
MODEL 3	4,0 mm / 10 mm	perpendicular to horizontal plane	4,0 mm / 12 mm	25° tilted
MODEL 4	4,0 mm / 10 mm	perpendicular to horizontal plane	4,0 mm / 12 mm	30° tilted
MODEL 5	4,0 mm / 10 mm	perpendicular to horizontal plane	4,0 mm / 12 mm	35° tilted
MODEL 6	4,0 mm / 10 mm	perpendicular to horizontal plane	4,0 mm / 12 mm	40° tilted

Table 4: Configurations and inclinations of the implants used in the study.

The maxilla was represented as a combination of cortical and cancellous bone. The cortical plate (see above, Fig 17, colour-code: yellow) was assumed around a cancellous core (see above, Fig 17, color-code: green) and was modeled with a mean dimension of 0,5 mm around the implants, with an increased thickness about 1,5 mm in the upper part. For implant longevity in posterior region, it is important to maintain at least 1 mm of bone between the posterior sinus wall and the implants. In this study, therefore bone plates of at least 1,2 mm were modeled in these regions. The residual ridge height in posterior region (vertical height between the maxillary sinus wall and the alveolar ridge) was approximately 7 mm and identical in all models.

The interest in this study was on the influence of implant tilting on the stresses and strains in the direct vicinity of the implant. Therefore only the half of the maxilla was analyzed. The maxilla and the metal superstructure (bar connection) were assumed to be symmetric. Inclusion of the entire maxilla in analysis would have resulted in a finite element model that consists of a great number of elements and nodes. By analyzing only the half of the maxilla, a finer finite element mesh was obtained, which probably led to a higher numerical accuracy of the results

6.2 Material Properties

All material used in this study were considered to be isotropic, homogeneous and linearly elastic. The elastic properties of cortical bone, cancellous bone and titanium alloy are given in Table 5. The trabecular bone is a highly porous structure and different elastic properties can be discerned at different levels. But in the finite element model used here, the cancellous bone was modeled as a continuum. This means that the mechanical behavior of trabecular bone was studied at macroscopic level. Fig 18 displays the three-dimensional element mesh for the solid bone configuration.

MATERIAL	***YOUNG'S MODULUS***	***POISSON'S RATIO***
Cortical bone	15000 MPa	0,0
Cancellous bone	20000 MPa	0,0
Titanium	110000MPa	0,3

Table 5: Elastic properties of the materials used in the study.

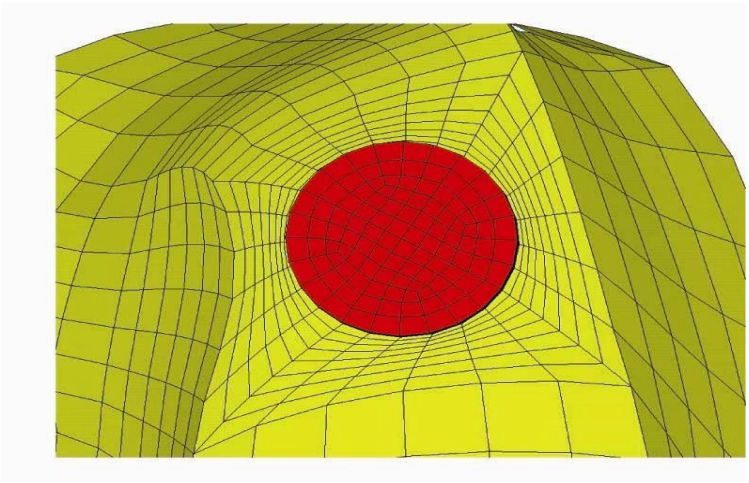

Fig 18: 3-D element meshes of the solid bone configuration.
(red: cancellous bone, yellow: cortical layer)

6.3 Interface Conditions

The interface between implant and bone was modelled as a continuous bond. This implies an ideal osseointegration, without any relative motion at the interface. In other words, the implants were rigidly anchored in the bone, showing a fixed and same type of bond at all material interfaces.

6.4 Elements and Nodes

The superstructure (bar attachment) and the implants were meshed with eight-node hexahedral elements in all models. The cortical bone was messed with eight-node hexahedral elements, whereas the cancellous bone was meshed as much as possible with eight-node hexahedral elements, otherwise four-node tetrahedron elements. Generally the total numbers of elements used in the study were sum up to 123000, and the numbers of nodes were 10000000. The number of elements and nodes in each model is as follows:

Model 1: 118105 elements and 93384 nodes

Model 2: 123398 elements and 97192 nodes

Model 3: 125848 elements and 121749 nodes

Model 4: 124090 elements and 100511 nodes

Model 5: 124203 elements and 98179 nodes

Model 6: 123136 elements and 97422 nodes

6.5 Loading Conditions

As explained before, the direction and magnitude of masticatory forces vary greatly between the individuals and location of force application in mouth. In this study, eight different loading conditions are considered. All forces were applied to the centre of the superstructure as point loads. To stimulate masticatory loading, vertical and horizontal forces were applied. A vertical load (was parallel to implant axis) of 100 N was applied in the regions of 013, 015, and 017 symmetrically (Fig 19). An oblique load of 100 N was applied in the region of 016 inclined

posteriorly 15°, 30°, 45° relative to implant axis, and 15°, 30°, 45° away from the sagittal plane, leading to three different non-axial loading conditions (Fig 20). This aimed to simulate the masticatory forces as much as possibly. This selected region for inclined loading was assumed to simulate the chewing centre. Application of such inclined forces generated spatial forces acting on the implants. The values of vertical and horizontal forces were within the range of measured implant forces in-vivo (Merickse-Stern et all. 1996, Duyck et all 2000).

Load I:	100 N (vertical load) in region 013,	symmetrical application
Load II:	100 N (vertical load) in region 015,	symmetrical application
Load III:	100 N (vertical load) in region 016,	symmetrical application
Load IV:	100 N (vertical load) in region 017,	symmetrical application

Load V:	100 N (non-axial load) in region 016,	0° inclined,	asymmetrical application
Load VI:	100 N (non-axial load) in region 016,	15° inclined,	asymmetrical application
Load VII:	100N (non-axial load) in region 016,	30° inclined,	asymmetrical application
Load VIII:	100 N (non-axial load) in region 016,	45° inclined,	asymmetrical application

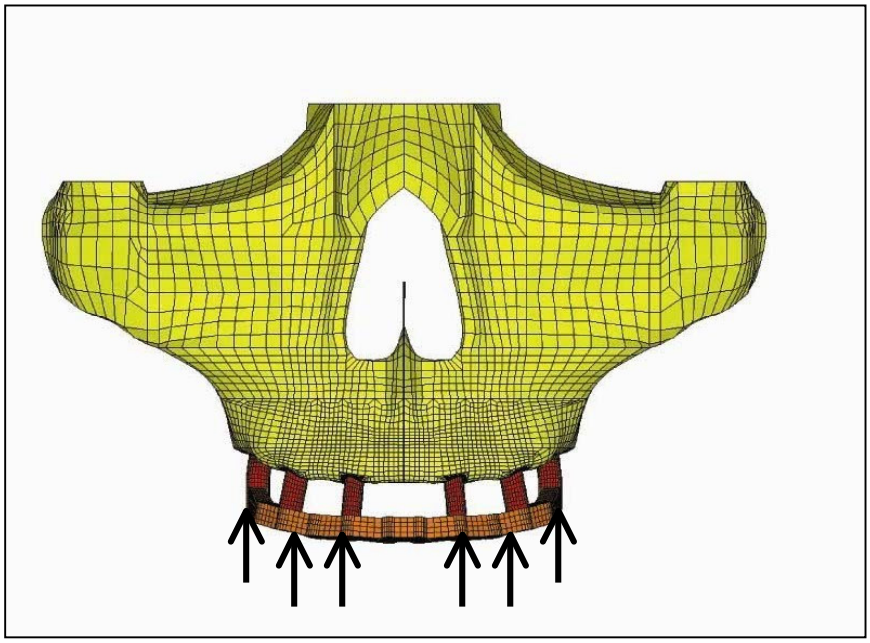

Fig 19: Graphic demonstration of the vertical loads:
in region of 013, 015, , 017 (Load I, Load II, Load III)symmetrically

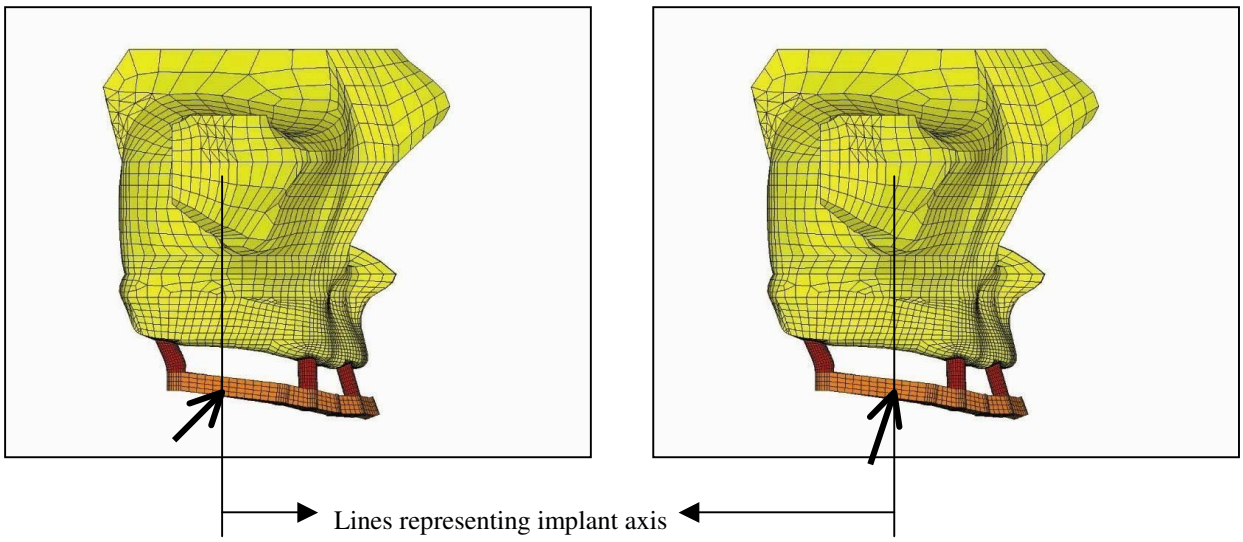

Fig 20: An oblique load was applied in the region of 016 inclined posteriorly 45° (left) and 30° (right) relative to he implant axis.

6.6 Software and Evaluation

The 3-dimensional finite element-processing program ANSYS version 6.1 was used to perform the analysis for each loading condition. Data von Mises' equivalent stresses, maximum tensile and compressive stresses were produced numerically and colour-coded.

7. Results

The results of each of the loading conditions for each implant inclination are presented in terms of von Mises' equivalent stresses (σ_{equ}), maximum tensile (σ_I), and maximum compressive strains (σ_{III}). These parameters are chosen for interpreting the results, because principle stresses (tensile and compressive stresses) are important parameters in evaluating the stress and strain distribution for brittle materials, such as bone. The probability of failure of osseointegration is greater when the amplitude of principal stresses is greater or/and equal to ultimate compressive stress of bone. Von Mises'' equivalent stress values are essential for ductile materials in interpreting the stresses occurring within the implant material (Akca & Iplikcioglu 2001). In Table 6,7, and 8 the maximum values of the principle tensile and compressive strains, as well as the von Mises'' equivalent stresses for each model are given.

In this study the effect of each load type on each implant inclination was individually assessed. Each model was separately analysed for pure axial loads; Load I, II, III and IV, and non-axial loads; Load V, VI, VII and VIII. To appreciate the numerous situations considered, first of all, the results for maximum tensile, maximum compressive strains and von Mises'' equivalent stresses are separately reported, and in detail explained. Thereafter, the vertical load and oblique loading conditions are described and the effects of two load types are compared.

The major interest of this study is to examine the effect of implant tilting on stress distribution in an edentulous upper jaw. Therefore, only the results for implants placed in tuber region are reported. The stress and strain distribution of the implants placed in anterior region and in premolar region is not reported.

7.1 Maximum tensile strain (σ_I) results

Models	***LOADS***							
	Load I	Load II	Load III	Load IV	Load V	Load VI	Load VII	Load VIII
Model I	7,89	7,71	7,49	8,10	7,51	5,99	31,72	78,12
Model II	4,01	9,28	16,34	19,50	16,46	8,65	32,64	103,86
Model III	4,49	8,03	15,07	19,34	15,23	10,74	21,71	100,05
Model IV	3,71	7,75	13,41	15,36	13,52	9,36	16,11	87,49
Model V	3,83	6,53	10,96	12,50	11,05	9,02	10,31	67,29
Model VI	3,98	13,45	24,07	28,36	24,26	16,79	11,44	68,71

Table 6: Maximum tensile strains values (MPa) for Tuber implants

The maximum tensile strain values for each model is listed above (Table 6). When the results are examined generally, it is seen that the stress values show significant difference between the load types. According to the results of this study, in Model 1 (in which the tuber implant is placed perpendicular to horizontal plane) the tensile stresses resulting from pure axial loads had approximately always the same amplitude. The magnitude of tensile stress due to Load I around the tuber implant in this model is slightly greater than the other stresses occurred due to Load II, III, and V, whereas the stress amplitude due to Load IV was slightly greater than the others (see Table 6 above). But the difference was not significant (approximately 3% increase). The tensile stress value of each load type was in normal limits under pure axial loading for this model configuration (7,59 - 8,10 MPa). But the condition for the non-axial loads was not the same. Although the load applied with an inclination of 15° led to normal tensile stresses (5,99 MPa), the other inclined loads (30° and 45°) led to extremely high tensile stresses (31,72 MPa- 78,12 MPa).

The recorded tensile stresses under pure axial loading in the other models (representing tilted implants) were different than Model 1. The value of tensile stresses around tilted implants due to Load I (anterior load application) were in between 3,71 MPa- 4,01 MPa, indicating stresses within normal limits. But the amplitude of tensile stresses in each model occurring due to Load II, (load application in premolar region) increased progressively as the inclination of the implant increased. But they were all within normal limits (6,53 MPa- 9,28 MPa), with an exception in Model 6. In Model 6, the maximum tensile stress value (13,45 Mpa) was relatively higher than the others. The entire posterior pure axial loading led to high tensile stress levels around tilted implants (see Table 6 above). The ratio of the amplitude of each tensile stress for Model 2, 3, 4, 5 are approximately as follows:

Load I: Load II: Load III: Load IV: = 1,0: 2,5: 4,0: 4,75

But in Model 6 (which represents an extreme situation) there is an enormous difference between stresses occurred due to anterior and posterior loading. The tensile stresses occurred due to posterior loading were eight times greater than the ones occurred due to anterior loading.

When the tensile stress levels are compared for non-axial loading, as in Model 1, Load VI led to normal levels of stresses (8,65 MPa- 10,74 MPa), with an exception of Model 6. As Load VII led to normal or slightly high levels of tensile stresses (10,31 MPa- 32,64 MPa), Load VIII led to extremely high stresses (67,29 MPa- 103,86 MPa). But as the results examined cautiously, it has been seen that tensile stress levels for all non-axial loading condition decrease slightly as the inclination of implant increases.

According to the results of this study, it can generally be stated that, the tensile stresses around the tilted implants increase significantly for each type of loading, as the place of load application moves posteriorly. But the situation is opposite in Model 1 (around the non-tilted implant), in which the anterior loading led to the greatest stress around the tuber implant.

7.2 Maximum compressive strain (σ_{III}) results

Models	***LOADS***							
	Load I	Load II	Load III	Load IV	Load V	Load VI	Load VII	Load VIII
Model I	-14,76	-18,53	-31,75	-39,50	-32,28	-16,04	-33,38	-59,68
Model II	-21,96	-37,52	-68,97	-89,37	-69,65	-26,35	-24,10	-39,06
Model III	-21,82	-49,23	-90,38	-114,66	-91,15	-45,62	-35,89	-46,79
Model IV	-20,20	-51,01	-93,00	-118,57	-93,66	-48,12	-34,38	-39,19
Model V	-14,86	-44,91	-81,29	-103,22	-81,78	-44,29	-31,44	-40,06
Model VI	-19,44	-58,39	-104,14	-130,83	-104,73	-61,04	-50,61	-52,02

Table 7: Maximum compressive strains values for Tuber implants in MPa.

Maximum compressive stress values for all investigated models were concentrated in cortical layer. This was observed in each type of loading. The results of the compressive strain distribution were not greatly different than the results of the tensile stresses. When the effects of the loads are examined generally, it is seen that the pure vertical and non-axial loads led to least stress concentrations in Model 1, and the highest in Model 6 (see Table 7 above). Depending on the location of the load application, the models showed different compressive strain distributions and magnitude. As the implant inclination increased and the point of load application moved posteriorly, the compressive stresses increased, too. But Model 5 was an exception. In model 5, the magnitude of compressive stresses decreased as compared to other models. This decrease was more dominant as the load application point moved posteriorly.

In Model 1, in which the implant was placed perpendicular to horizontal plane, the stress concentrations increased progressively as the load application moved posteriorly. There was not any great difference between the effects of pure axial loads and non-axial loads on the compressive stress distribution. But it should be pointed out that among the posterior loads, (both axial and non-axial), Load VI was the one which led to least stress around the implant (16,04 MPa). It was observed that only the Load I led to compressive stresses (14,76 MPa) in normal

limits, the other loads led to high- relative high stress magnitudes (16,04 MPa- 59,68 MPa) around the implant.

The Load 1 led to significantly less compressive stresses (14,86 MPa- 21,96 MPa) in all of the models (Model 2, 3, 4, 5, 6), representing the tilted implants. The least magnitude was observed in Model 5 (14,86 MPa) and this value was approximately the same as in Model 1. The increase of the compressive stresses around tilted implants under pure axial loading cannot be correlated with each other. They showed completely different increase rates. Furthermore the magnitude of these values was relative high (see Table 7 above). The difference of the increase in the compressive strain values due to Load II and III were greater than the others. In other words, the posterior loads led to significantly higher stress magnitudes (81,29 MPa- 130,83 MPa) in all models than the anterior (14,86 MPa- 21,96 MPa) and premolar loading (37,52 MPa- 58,39 MPa).

The non-axial loads generally led to less compressive stress values compared to axial loads (see Table 7 above). The magnitude of the stresses due to non-axial loads (Load VI, VII, VIII) varied between 26,35 MPa- 52,02 MPa, indicating high stresses around the implants. But the magnitude of the compressive stresses under horizontal loads in every model was less than the pure axial loads applied posteriorly. When the inclined loads compared with each other, it is seen that the loads with 30° led to least stress values in this group.

7.3 Maximum von Mises' stress (σ_{equ}) results

Models	***LOADS***							
	Load I	Load II	Load III	Load IV	Load V	Load VI	Load VII	Load VIII
Model I	12,15	15,61	25,70	25,70	31,18	26,07	13,45	70,98
Model II	16,54	26,57	45,30	45,30	56,00	45,61	15,73	90,45
Model III	14,64	33,26	58,37	58,37	70,85	58,77	27,71	88,48
Model IV	16,84	38,47	67,84	67,84	84,44	68,27	33,40	84,56
Model V	13,09	38,47	57,09	57,09	70,73	57,41	29,77	65,51
Model VI	14,81	32,67	71,13	71,13	86,77	71,53	39,42	84,17

Table 8:The maximum Von Mises' (MPa) stresses for Tuber implants.

The max. von Mises' stress values are summarised in Table 8. In all models, the highest stress levels were seen in the cortical bone around the implant neck. When the results are interpreted according to the place of load application, it is seen that magnitude of the anterior load (Load I) varied between 12,15 MPa- 16,54 MPa and reached to its highest level in Model 2 and 4, with slight differences (16,54 MPa in Model 2 and 16,84 in Model 4). This was an unexpected result, because nearly in every model under all types of loads, the highest stresses occurred in Model 6. But when the load was applied in premolar region (Load II), the stress values increased progressively as the implant inclination increased (15,61 MPa- 41,43 MPa), reaching to its highest value in Model 6. The von Mises' stresses of both loads were significantly less than the von Mises' stresses occurred due to the posterior loads. The posterior loads, regardless of their direction of application (axial or non-axial) led to high stress levels around the implants in all models (see Table 8). Again it can be concluded that von Mises' stress magnitudes in this study increased as the implant inclination increased and the point of load application moved in a posterior direction, with an exception in Model 5. In this model, it is observed that the von Mises' stress values decreased slightly compared to Model 4. Furthermore this model configuration had approximately the same stress magnitude of Model 3.

In addition to these conclusions, it is observed that the magnitude of von Mises' stresses were highest under axial and non-axial loads in Model 4 and 6, being approximately in the same level.

7.4 Vertical Loading Condition

A vertical load of 100 N was applied symmetrically in each model. Table 9,10, and 11 represent the maximum tensile and compressive strains, and the Von Mises'' equivalent stresses occurred when the implants were loaded only vertically. For all implants, regardless of their inclination, the highest stress peaks under vertical loading were observed in the cervical cortical bone at the implant surface. The peak points were chiefly concentrated in certain points at the mesial side of the implants. The stresses and strains observed in cancellous bone were not significant.

As the vertical load is directed upwards, the largest strains were compressive (negative). Figure 21 shows the tensile strain peak points (grey areas) distributions for each model. It is demonstrated that as the implant inclination increased, not only the tensile strain, but also the von Mises' equivalent stress peak points were distributed in a larger area directed from mesial to buccal. In general, the amplitude and distribution of the strains and stresses were similar for each implant inclination. As the inclination of the implant in respect to horizontal plane increased, the amplitude of the vertical forces acting on them increased, too. But there is only one exception. The amplitude of strains, and stresses occurred around the 35° tilted implant were significantly lower than the other tilted implants, but higher than the perpendicular placed implant (see Tables 9,10,11). According to these, it is concluded that the vertical forces were better tolerated by the implant placed perpendicular to the horizontal plane rather than the tilted implants.

The vertical loads, regardless of the implant inclination, caused compression at implant apexes. But neither of these loads led to high stress concentration at maxillary sinus wall. This might be due to sufficient bone mass (minimum 2 mm.) between the apexes of the implants and the sinus wall.

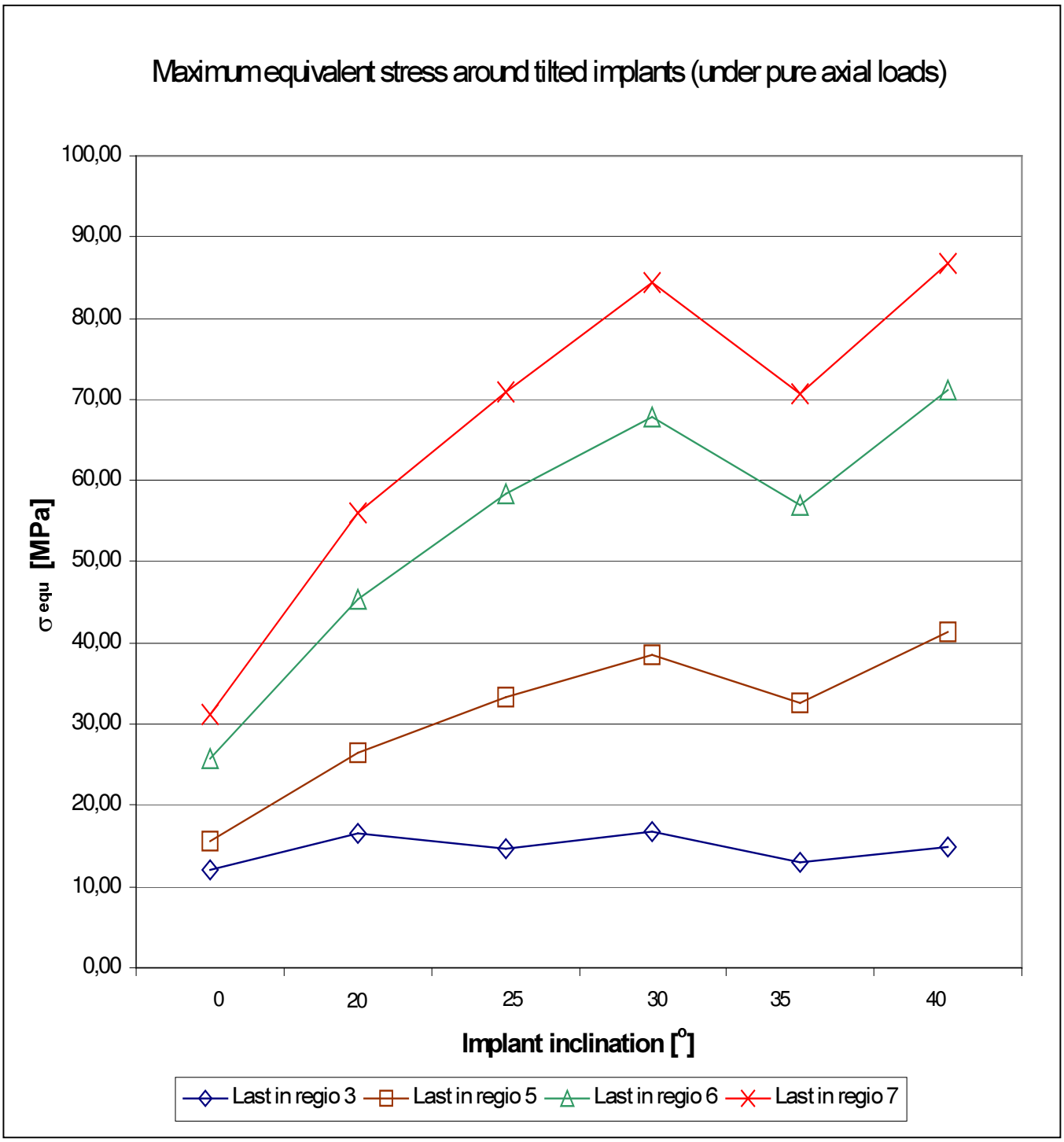

(Last in Regio 3: Load in region 3, Last in Regio 5: Load in region 5, Last in regio 6: Load in region 6, Last in regio 7: Load in regio 7)

Table 9: Maximum equivalent stress in cortical bone, in all models under pure axial loads.

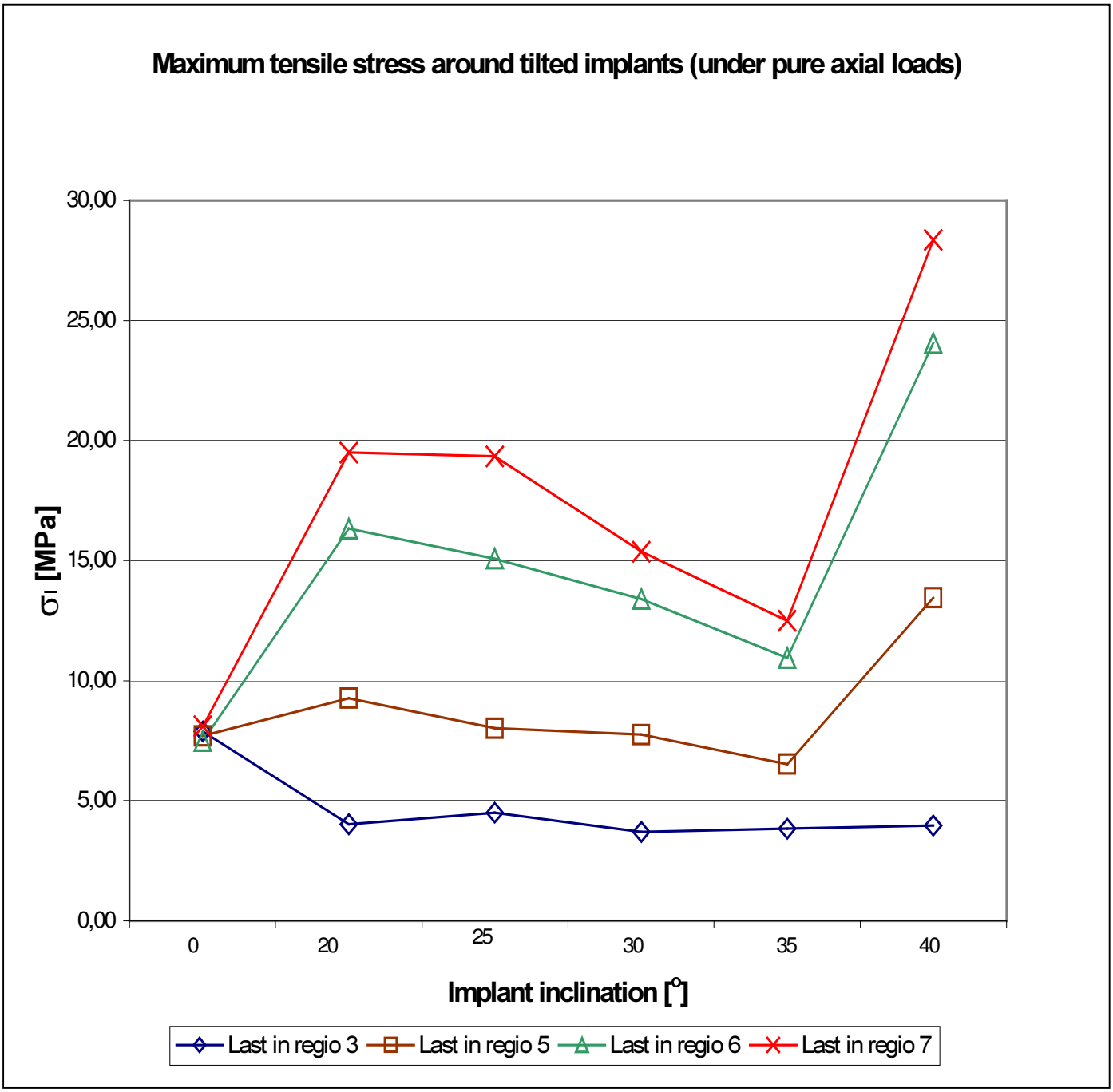

(Last in Regio 3: Load in region 3, Last in Regio 5: Load in region 5, Last in regio 6: Load in region 6, Last in regio 7: Load in regio 7)

Table 10:Maximum tensile stress values in cortical bone, in all models under pure axial loads

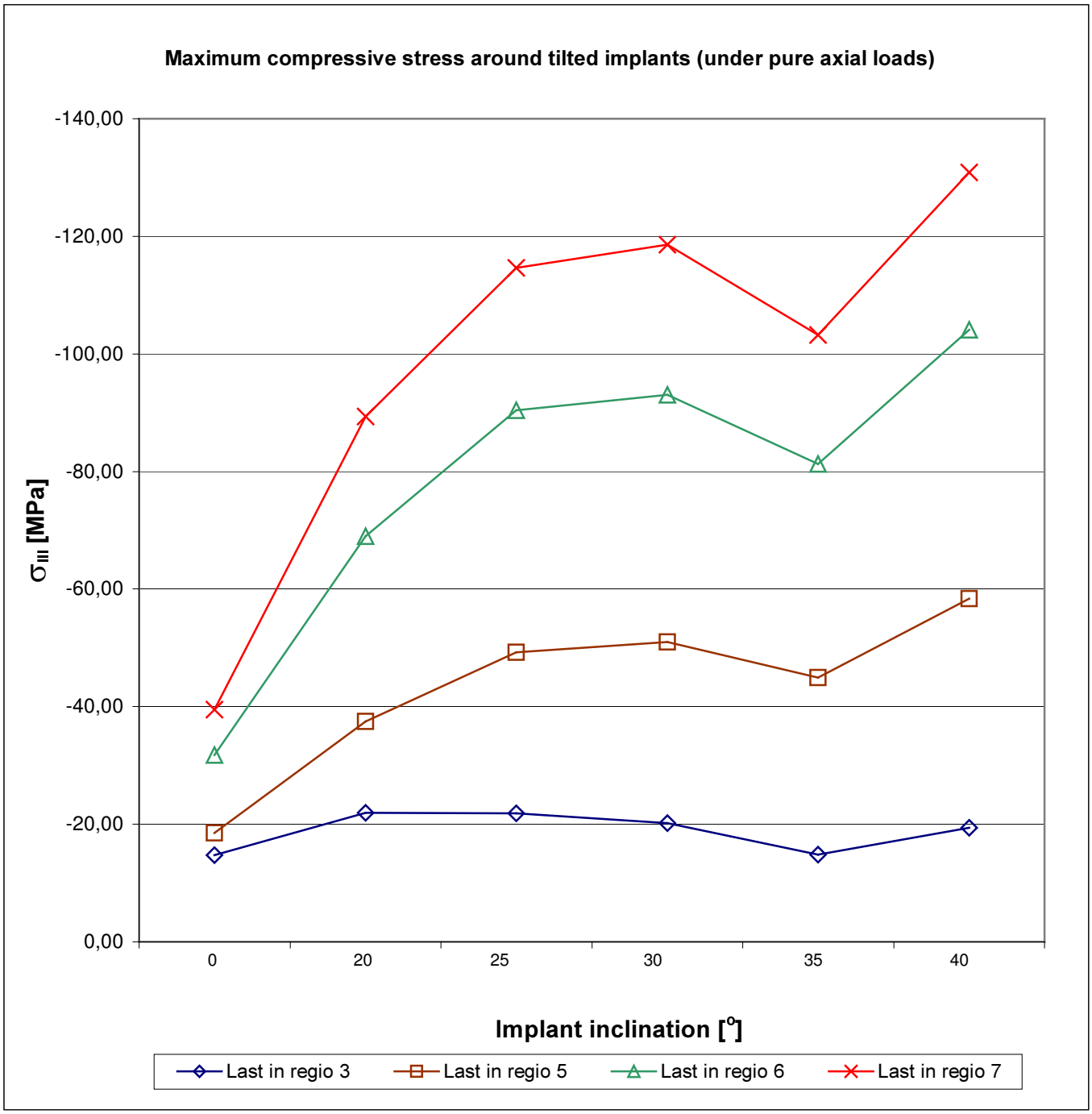

(Last in Regio 3: Load in region 3, Last in Regio 5: Load in region 5, Last in regio 6: Load in region 6, Last in regio 7: Load in regio 7)

Table 11: Maximum compressive stress values in cortical bone, in all models under pure axial loads

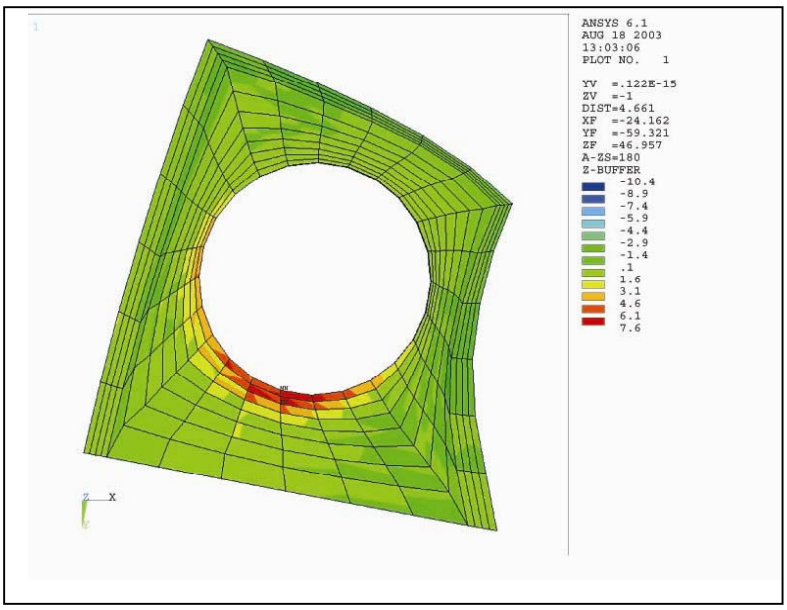

Model 1

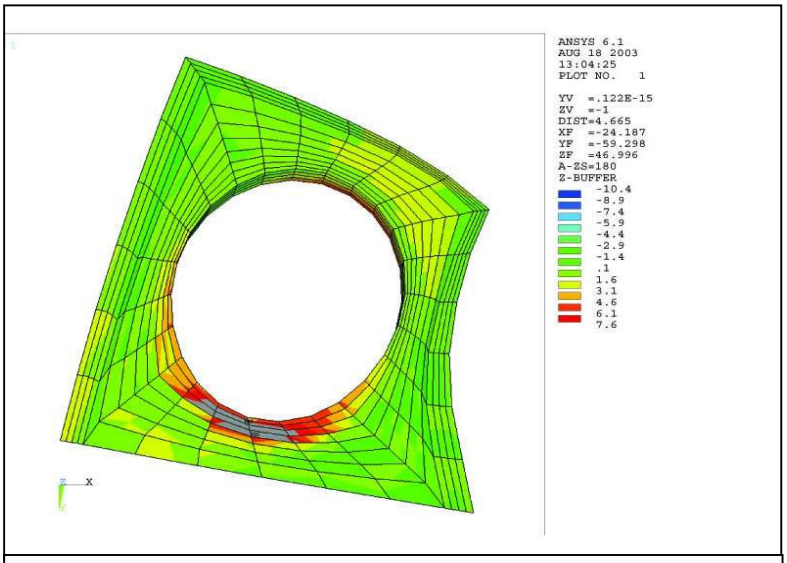

Model 2

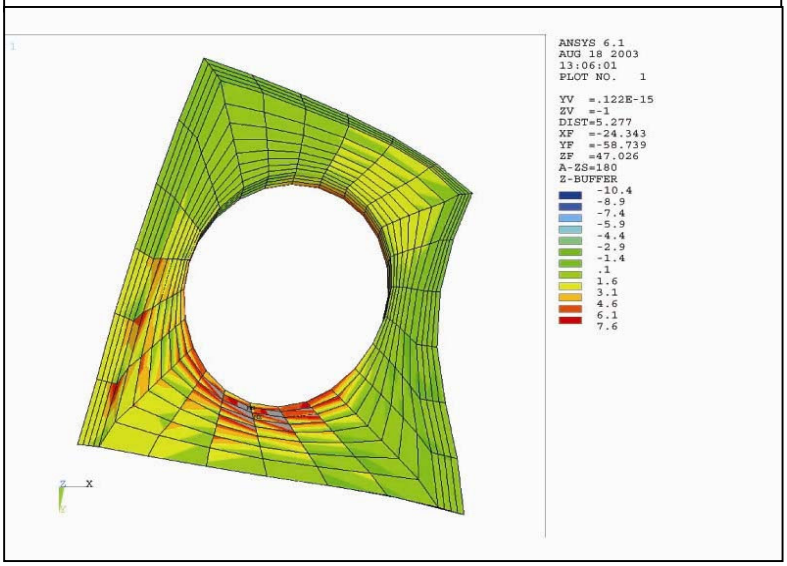

Model 3

Fig 21: Maximum tensile strain distributions of the implants in cortical bone (grey areas demonstrate the stress peak points)

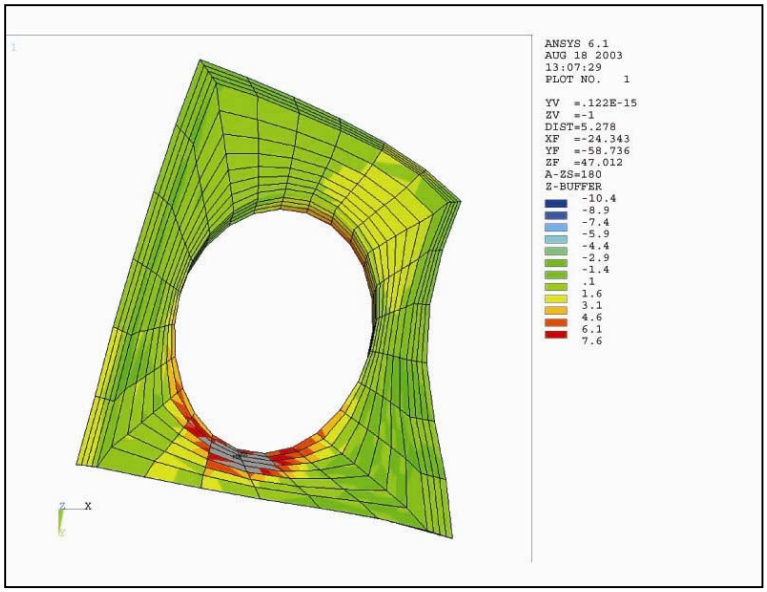

Model 4

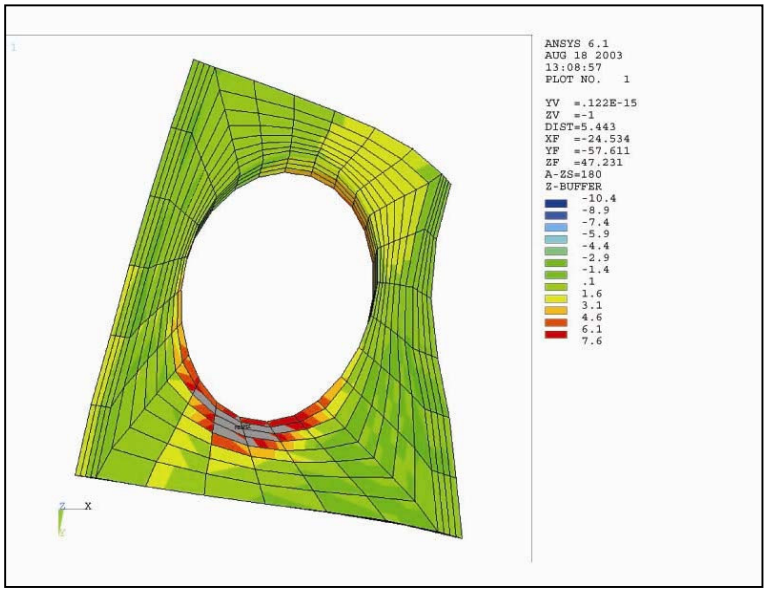

Model 5

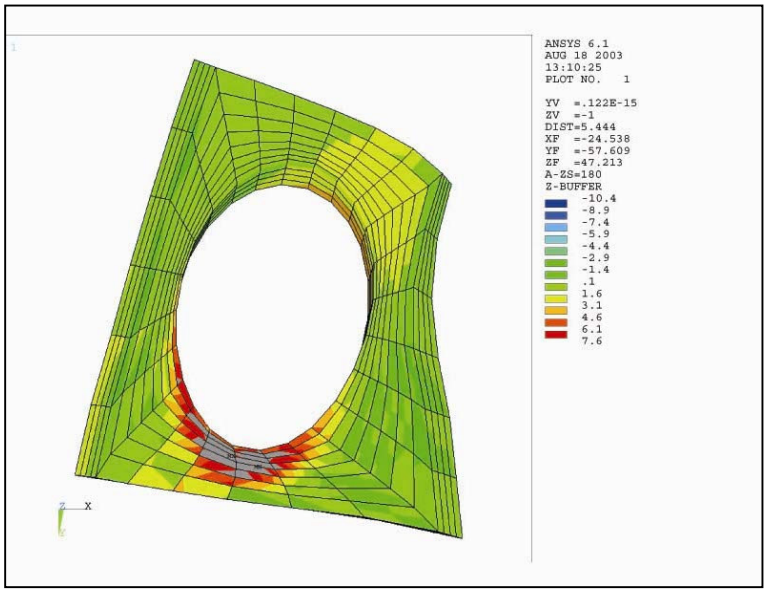

Model 6

Fig 21: Maximum tensile strain distributions of the implants in cortical bone. (grey areas demonstrate the stress peak points)

7.5 Non-axial Loading Conditions:

Four different types of non-axial loads of 100 N were applied asymmetrically in each model. Loads were applied in region 016 with an inclination of 0°, 15°, 30°, 45° in respect to horizontal plane, in order to simulate the masticatory movements in nature. Table 12, 13, and 14 represent the maximum tensile and compressive strains, and the von Mises' equivalent stresses occurred when the implants were loaded asymmetrically. In all models, regardless of implant inclination, the highest stress peak points under non-axial loads were chiefly observed in the cervical cortical bone at the mesial implant surfaces, distributing in a mesial- palatinal direction. The stresses and strains observed in cancellous bone were not significant. The max. tensile and max. von Mises' equivalent stress concentrations (grey areas) of the models are demonstrated in Fig 22 and 23 when the implants are loaded with Load VIII.

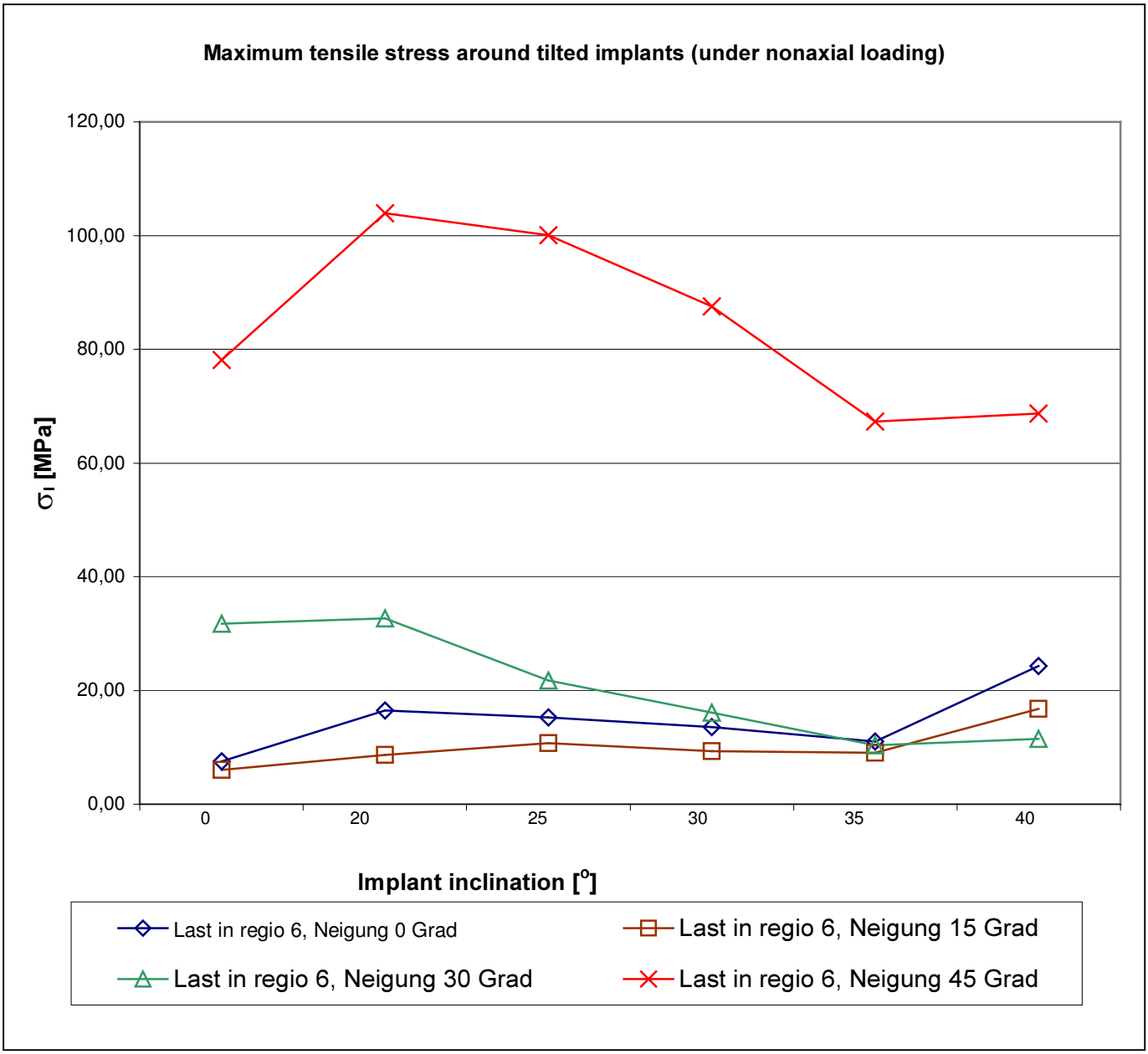

(Last in Regio 3: Load in region 3, Last in Regio 5: Load in region 5, Last in regio 6: Load in region 6, Last in regio 7: Load in regio 7)

Table 12: Max. tensile stresses values in cortical bone, in all models under non- axial load.

(Loads were applied in region 016 with an inclination of 0°, 15°, 30°, 45° in respect to horizontal plane, in order to simulate the masticatory movements)

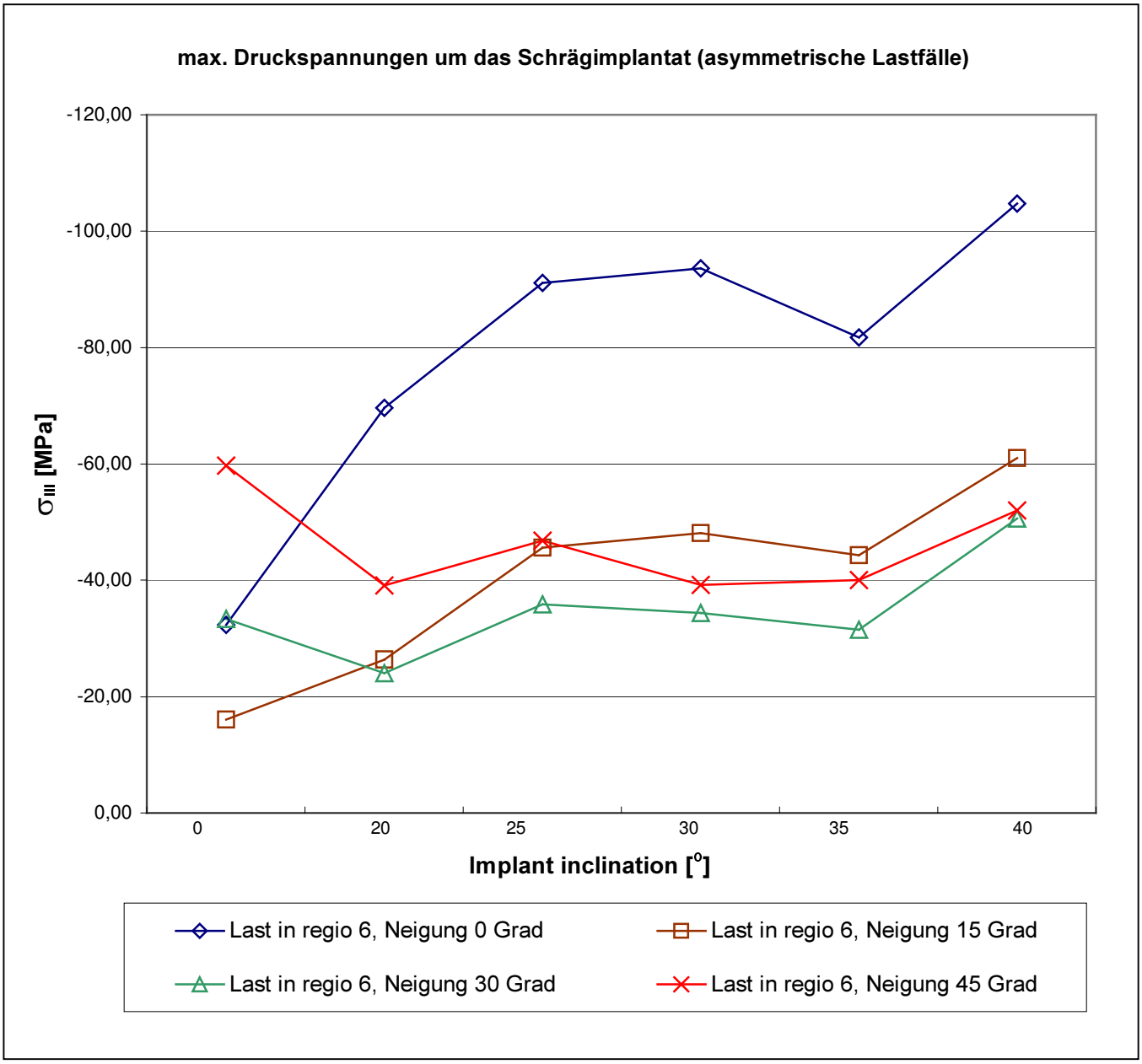

(Last in Regio 3: Load in region 3, Last in Regio 5: Load in region 5, Last in regio 6: Load in region 6, Last in regio 7: Load in regio 7)

Table 13: Maximum compressive stresses values in cortical bone, in all models under non- axial loads

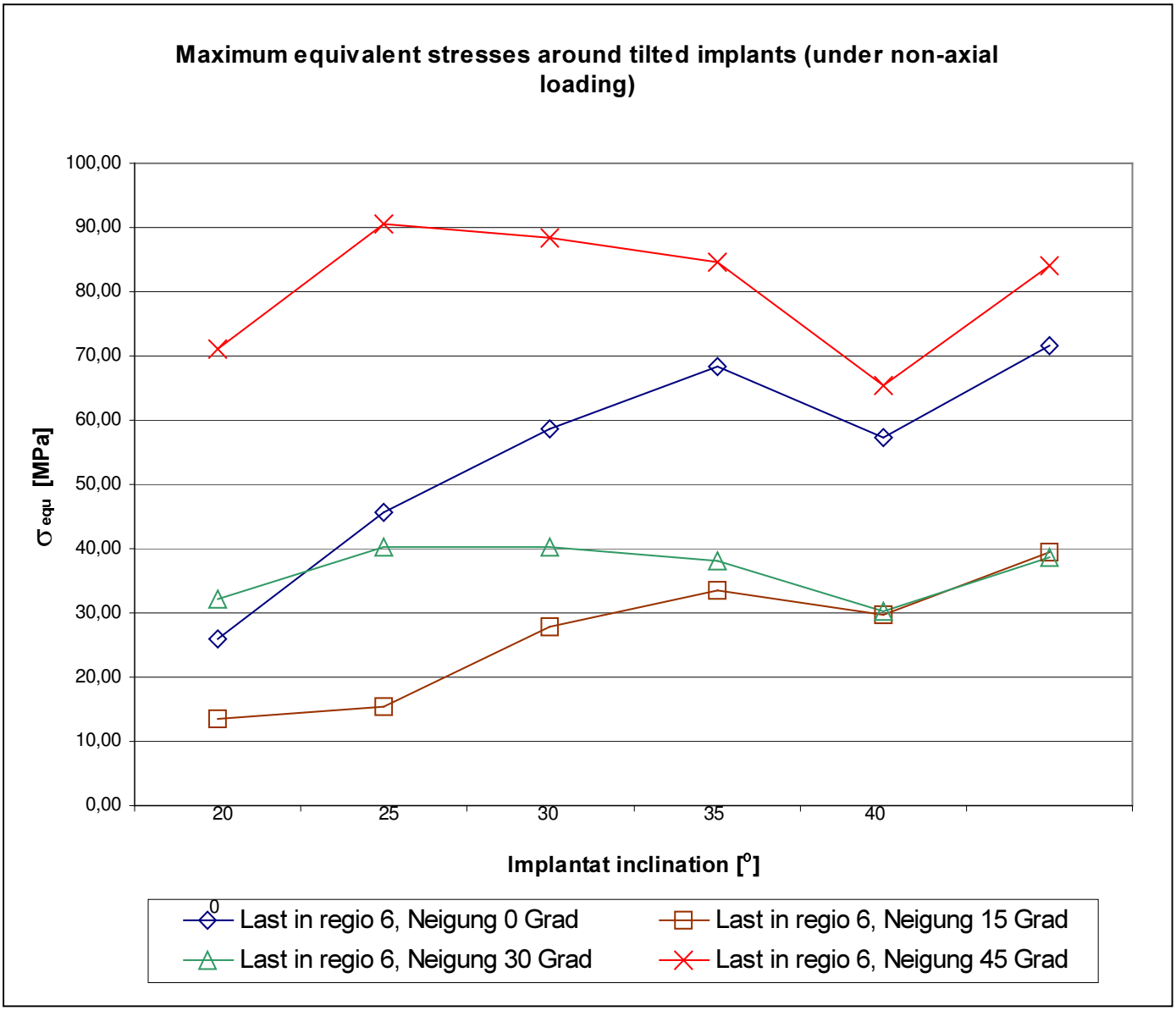

(Last in Regio 3: Load in region 3, Last in Regio 5: Load in region 5, Last in regio 6: Load in region 6, Last in regio 7: Load in regio 7)

Table 14: Maximum equivalent stress values of the models when they are loaded with non-axial loads.

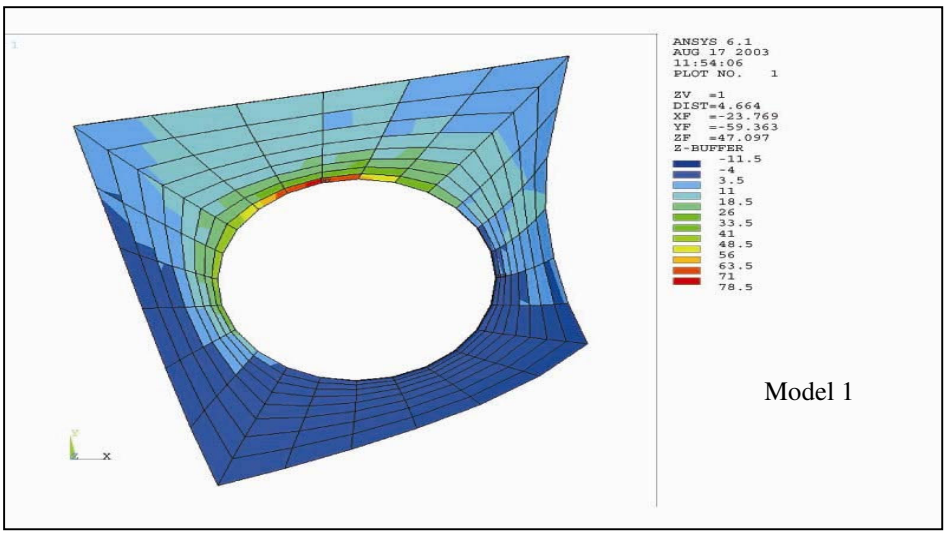

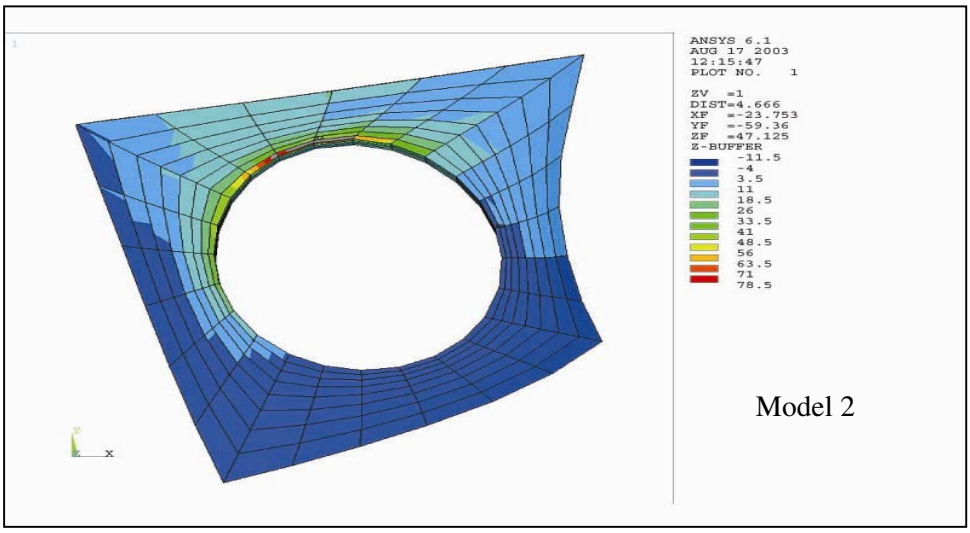

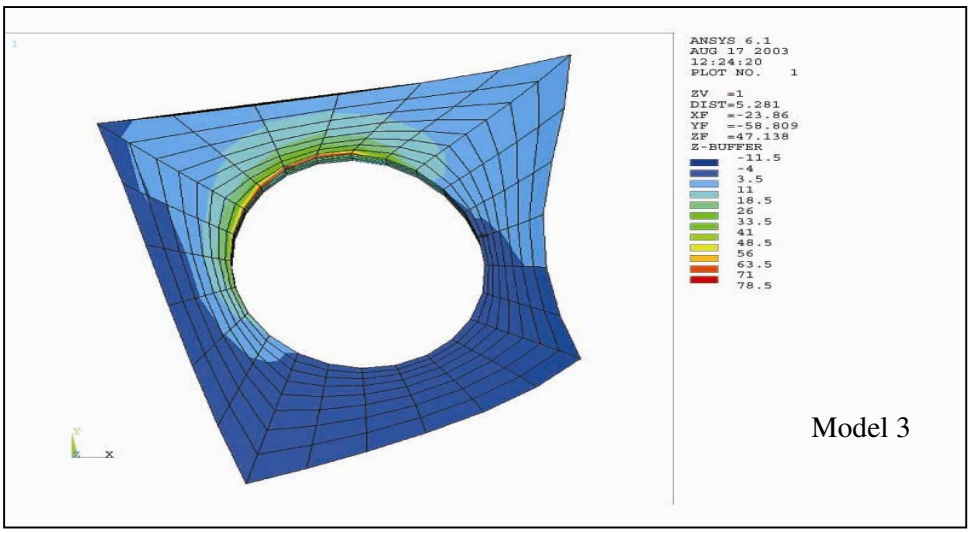

Fig 22: Maximum tensile stress concentrations are demonstrated at the mesial side of the implants. (Model 1, Model 2, Model 3)

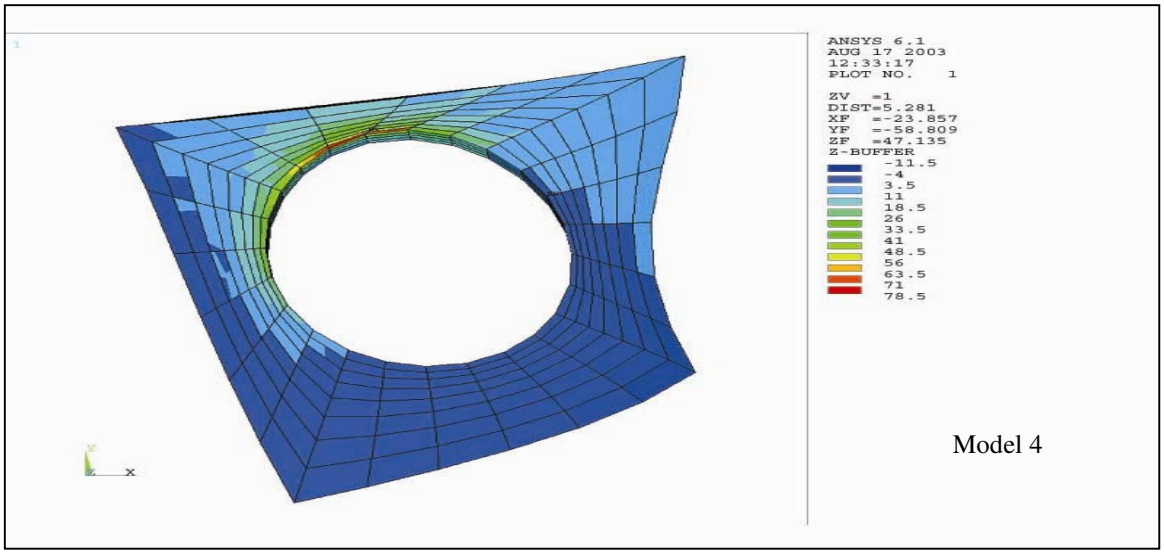

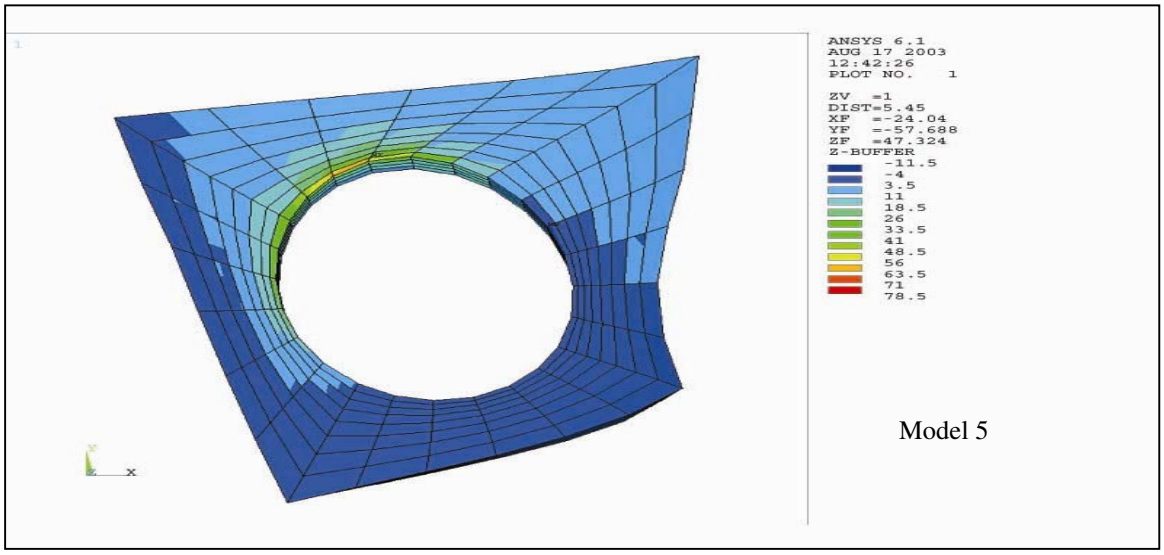

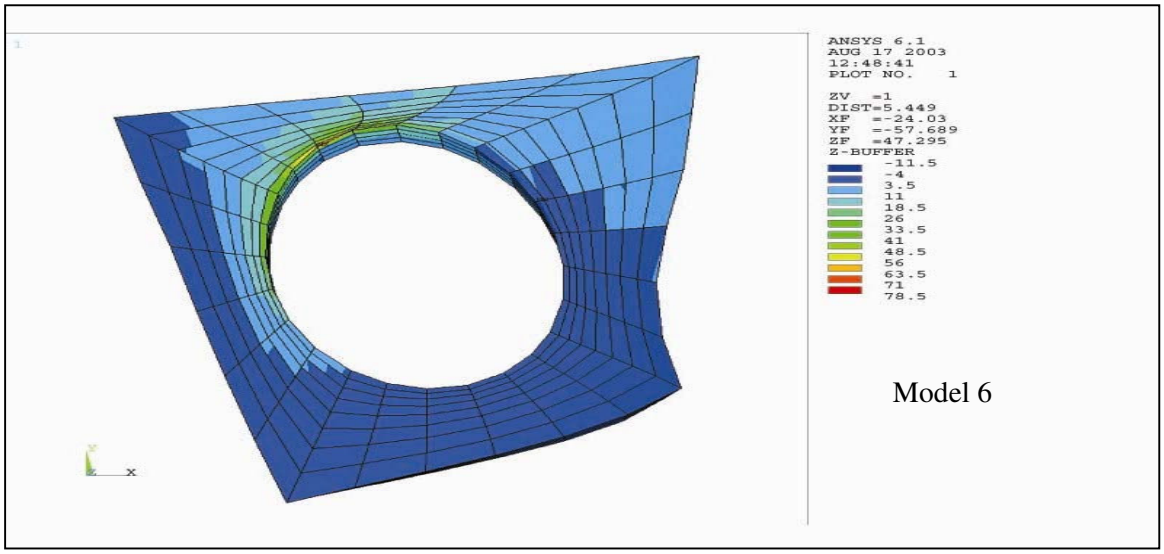

Fig 22: Max. tensile stress concentrations are demonstrated at the mesial side of the implants.

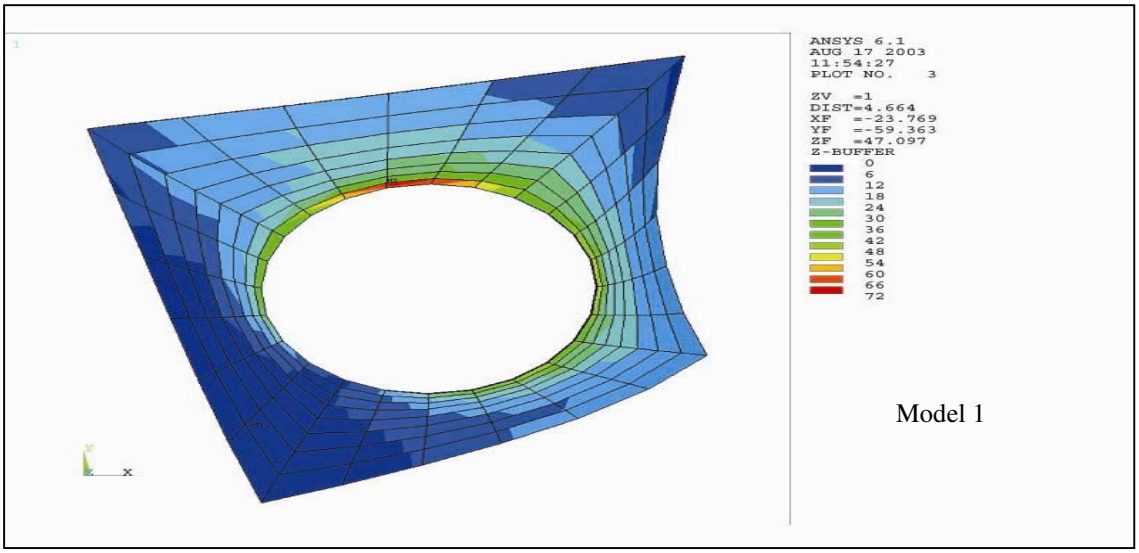

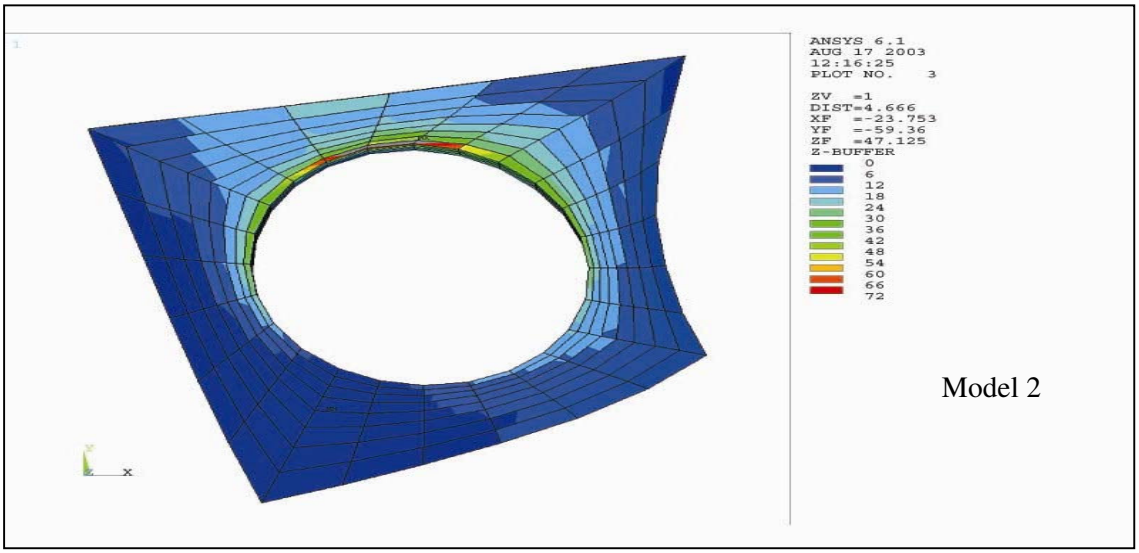

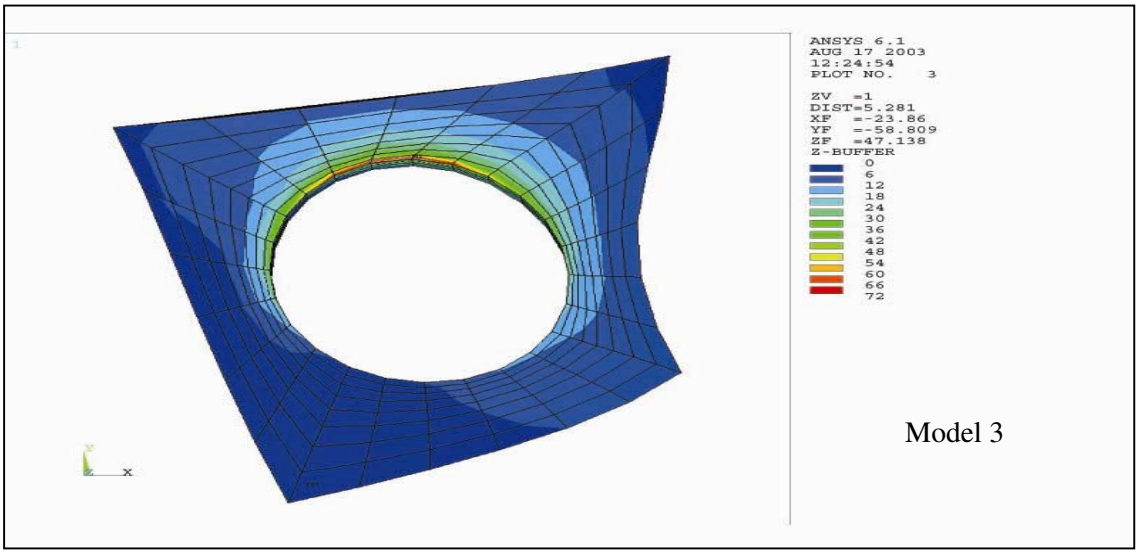

Fig 23: Maximum equivalent stress concentrations are demonstrated at the mesial side of the implants

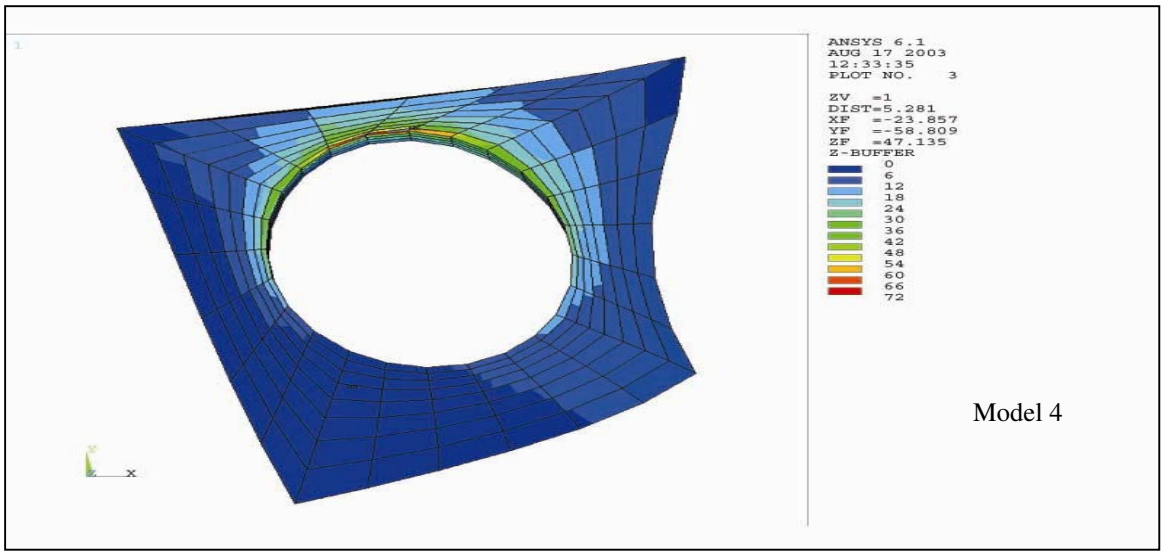

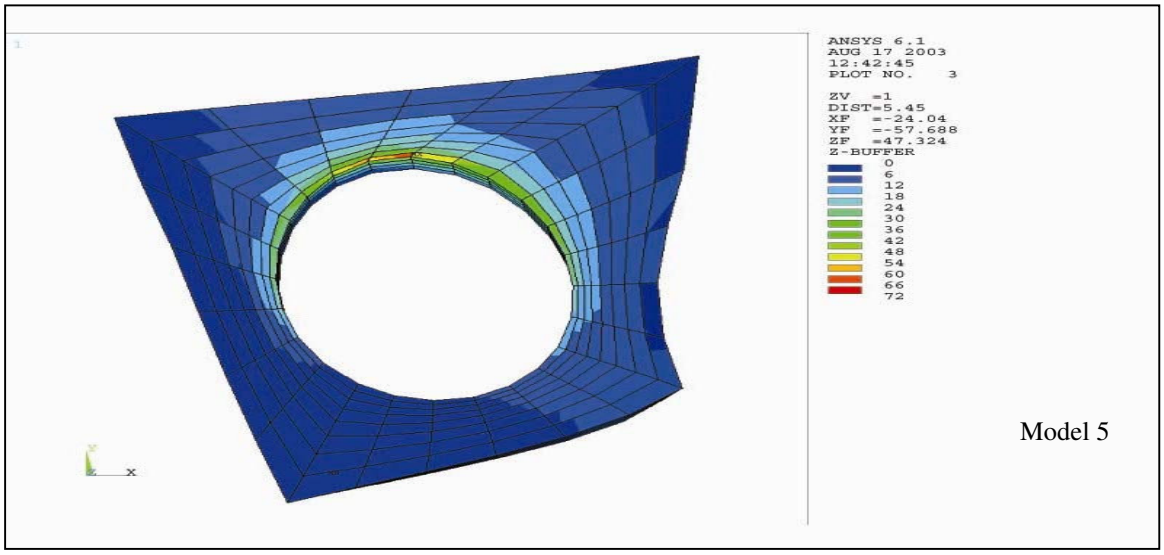

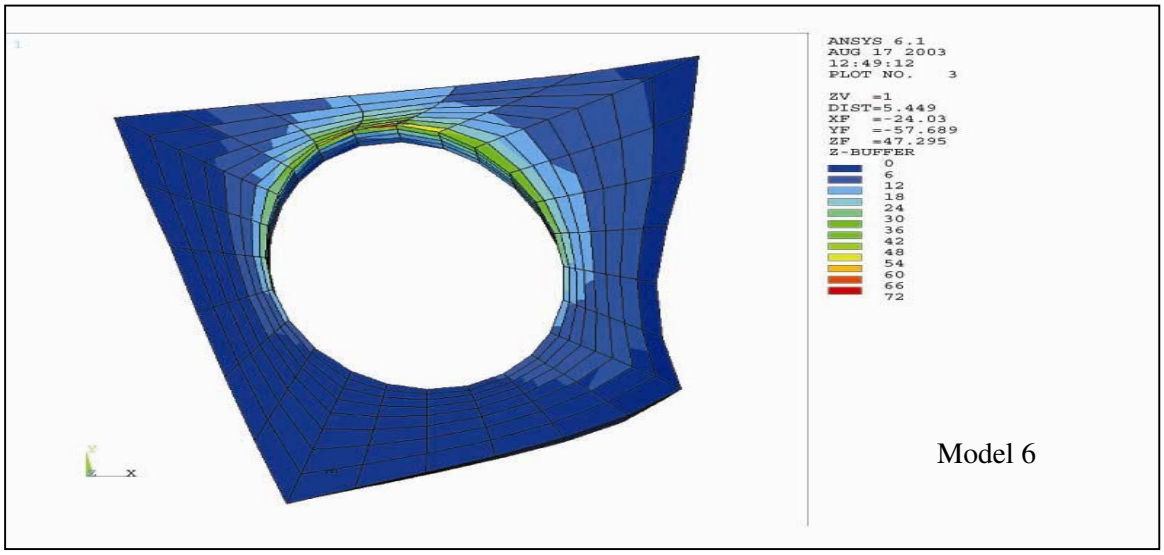

Fig 23: Maximum equivalent stress concentrations are demonstrated at the mesial side of the implants

When the non-axial loads were applied in models, the recorded stresses distributions showed significant differences. It was impossible to draw general conclusions for the effects of inclined loads in every model. So the results of the non-axial loads are examined according to stress types. But it can be said that regardless of the type of stresses and strains, it is observed that the Load VIII led to relatively high levels of stresses in all models.

The magnitudes of the maximum tensile stresses (7,51 Mpa- 28,26 Mpa) were approximately the same for Load V, VI in each model. Load VII led to slightly higher strains around the implants and as the implant inclination increased, the stresses due to Load VII decreased (see Table 12). The maximum tensile stresses due to Load VIII were evidently higher (67,29 Mpa- 103,86 Mpa) for each model configuration. Furthermore these values were higher than the stresses occurred due to axial loads. The value of the maximum tensile stresses occurred due to Load VIII were nearly 4 times greater than the tensile stress magnitude due to other non-axial loads (see Table 6,7,8 above). To sum up, it can be said that the magnitude of the tensile stresses decreased within each loading condition as the implant inclination increased. The highest maximum tensile stresses were recorded in Model 2 (8,65 Mpa- 103,86 Mpa), the lowest stresses were recorded in Model 5 (9,02 Mpa- 67,29 Mpa).

The results of the von Mises' equivalent stresses did not show any significant difference than the results of the tensile stresses. When they were examined, it was seen that the Load VI and Load VII led to lowest stresses and Load VIII led to highest in all models. This was the opposite for the compressive stresses. Load V and VI led to highest, VII and VII to lowest stresses in each model. The compressive stress concentrations were mainly localised in palatal side of the implants.

According to this study, the following results are obtained when non-axial loads with different inclinations were applied to the models:

- The magnitude of the stresses and strains around the implants increased as the inclination of the loads increased.
- The loads with 15° and 30° inclinations were better tolerated by the implants than any other inclined loads (30° or 45° inclination in respect to horizontal plane) and vertical loads applied in posterior region.

8. Discussion

8.1 Limitations of the finite element analysis:

It is scientifically proved that a major factor in the long-term success of osseointegrated implants is the mechanical overload (Roberts 1988, Brunski 1992, Hoshaw et al. 1994). Functional stress between 200 and 700 psi is reported to maintain existing alveolar bone height (Rieger et al. 1990). Stress outside this range has been reported to cause degeneration of bone tissues. Degeneration ensues if the stresses are too high; bone atrophy occurs if the stresses are too low (DeTolla et al. 2000). Therefore, understanding the relationship between the forces acting on implants, the force transmission to surrounding bone and the responses of the interfacial tissues is essential in maintaining the osseointegrated implants' and their superstructures' long-term function.

In recent years, field of implant dentistry has benefited from the computer-aided designs with associated finite element analysis in achieving the proper implant and prosthesis design. Finite element analysis (FEA) method is used in many biomechanical studies to investigate the stress distributions in implant- bone complex (Akca et al 2001, Menicucci et al 2002, Mailath et al. 1991). This method can precisely model the complex geometries mathematically and stress and stain distributions may be obtained from a solution of equilibrium equations. Compared with the other techniques (photo elastic model studies, strain gauge analysis on physical models) FEA seems to be a superior tool in evaluating biomechanical loads on implants because it is capable of simulating both isolated vertical and horizontal forces, as well as combined oblique loads (Tepper et al 2002).

The accuracy of a finite element study relies on the simulation of the model which represents the natural tissues. In a finite element study, a two dimensional or a three dimensional model can be used for an accurate prediction. Different patterns of stress values and magnitude were calculated around the maxillary implants when an anatomic and a non-anatomic model are used (Simon et al. 1977, Ismail et al. 1987). In 2-D system, it is assumed that out-of-plane deformations, starins and stresses are negligible (DeTolla et al. 2000). Such models may lead to incoclusive data with numerical failure. Therefore in this study a complex 3-D anatomical finite element model is used to investigate the effect of inclined implants on stress distributions in edentulous maxilla. The complexity of the model in the study depends on two factors: the spatially complex geometry of

the atrophic maxilla is used, and vertical, horizontal and loads with different inclinations (representing oblique loads) are applied symetrically and asymetrically at the same time.

The model of the present study is derived from a model whose geometrical data are based on the "Visible Human Project" (Glas et al 1996). The University of Karlsruhe, Institute for Mechanic, Biomechanical Research Group (Chairman: Dr. J. Lenz), further developed the skull of the "Visible Human Project" and a geometrical modeling of the maxilla is obtained. The anatomical model of this study consists of the entire maxilla, maxillary sinus on each side, nasal cavity and cylindrical implants. The posterior alveolar bone height (especially in tuber region and the residual bone height under the maxillary sinus) is reduced to approximately 7 mm, which is thought to represent an atrophic edentulous maxilla of an individual.

However the reality is too complex to be simulated completely in a numerical model (McElhaney et all. 1970, Carter & Spengler 1978). Therefore in a finite element study several assumptions are made. The early attempts at modeling dental implants resulted in unrealistic assumptions (DeTolla et al. 2000). Complex reality is simplified assuming that proportion and relative effects reflect reality. For the convenience of the study, material properties, loads, boundary and interface conditions are simplified in the models. The structures are all assumed to be homogeneous and isotropic and to posses linear elasticity. However in fact, the maxilla is inhomogeneous and subjected to functional elastic deformations originating from masticatory forces, like other living tissues. In reality the loads from mastication are dynamic and oblique relative to the occlusal surface of the implants. The approximation of masticatory forces, loads and bone properties of bone has been attributed to insufficient computer capacities (Ladd & Kinney 1998). But recent improvement in computer programming methods, computational power and digital imaging techniques have allowed FEM to better analyze the biological structures (Ulrich et al 1998).

The implants in the present study are so simulated that they are rigidly bounded to bone over the entire surface and fully (100 %) osseointegrated, as in many other studies (Tepper et al. 2002, Kawasaki et al. 2001, Van Oosterwyck et al 2002). However histomorphometric studies have demonstrated that there is never 100 % osseointegration in bone. Simulating such an interface would cause redistribution of the strains in the models. All these assumptions imply a certain degree of uncertainty in all FE studies (del Valle et al 1997). For this reason, only larger changes in the strain levels are the interest of the study.

In the present study loads are applied to the occlusal surfaces of the superstructure in order to simulate real masticatory movements. But with a finite element analysis, precise calculations cannot be made, because there is great variation in the magnitude of the mechanical factors for bone. And in addition, masticatory movements and their magnitude vary enormously between the individuals (Glantz & Nilner 1998). Theoretically, the problem of predicting loads on the implants is a statistically indeterminate problem in mechanics. In most cases occlusal loads lie between 100 N and 2400 N. The average biting force by implant patients is reported to be 50 N during chewing and maximal bite force to be 145 N (Brunski 1992). Furthermore the masticatory loads are dynamic and oblique relative to occlusal surfaces of the implants. However in this study a static load of 100 N is applied vertically, horizontally and with different inclinations (representing oblique loads) symetrically and asymetrically at the same time from three diffrerent points of the maxilla. Simulating such a loading condititition can be considered as a realistic masticatory pattern (Holmgren et al. 1998). But whis is compared with the natural mastication pattern, loads with inclinations relative to implants axis and sagittal plane may be insufficient for complete simulation of oblique masticatory forces. These variations in important biomechanical factors may lead to imprecise calculations. Although the results of some other finite element studies (Holmes&Loftus 1997, Hoshaw et al 1994, Spiekermann 1994) demonstrated that the areas of higher stress concentrations (such as implant neck) coincided with stress analysis predictions, the exact stress values causing biological changes are not known (Lanyon 1984).

In this study, similar to other studies using simplified models of human jaw, the model compromises a cortical bone layer, trabecular bone layer and commercially pure titanium implants. It is assumed that a homogeneous external layer of 1,3 mm cortical layer exists around the cancellous bone. However in reality the spatial distribution of the cortical and trabecular bone is very different and inhomogeneous. The inhomogeneity of the cancellous bone influences strongly the local elastic parameters. It is very important to choose the proper parameters in stress analysis with FEM (Rong 2002). The elastic modulus of cortical and trabecular bone shows considerable variability. Therefore the elastic modulus of cortical and trabecular bone are taken as an average of the several values cited in literature. These data are either gained from mechanical testing or ultrasonic testing from human and bovine material. However even such a model may lead to failures in numerical data. Therefore, the inherent limitations of the finite element stress analysis must be acknowledged. Since the reality is more complex than the simulated models, a qualitative comparison among the models is advisable rather than focusing on quantitative data from the finite element analysis (Stegaroiu et all 1998).

8.2 Implant Tilting

Patients suffering from hard and soft tissue deficiencies are invariably the most difficult group of patients to treat with osseointegrated implants. Severe atrophy of the maxilla, insufficient bone quality and quantity of the arches complicate the use of osseointegrated implants in the maxilla and usually necessitates advanced surgical techniques. However complicated surgical techniques are not always practical because of patient related factors and the increased risk of complications. Based on these considerations, pterygoid implants are suggested as an alternative treatment method (Bahat 1992, Tulasne 1992, Bahat 1992, Tulasne 1992). If the tuberosity region is of favourable dimension- height, width and length, an implant may be successfully placed within this structure.

The benefits of a posterior tilting can be summarised are as follows;

a) It provides an end- support for the prosthetical restoration. This additional distal anchorage helps to withstand occlusal loads by distributing them throughout the arch.
b) It allows the use of longer implants.
c) It reduces the cantilever length and broadens the prosthetic base.
d) It improves the cortical anchorage, indirectly the primary stabilisation of the implant, because the implant follows a dense, bony structure (Krekmanov 2000).

According the results of the present study, implant placement in the tuberosity region seems to be advantageous. In all models regardless of implant inclination, the highest stress peak points are observed in the cervical cortical bone at the mesial implant surfaces. The recorded stress at implant apexes and maxillary sinus wall are minimal. This result may be explained by a basic mechanical principle. When two materials of different moduli (in this study these materials are bone and implant) are placed in contact without any intervening material, stress concentrations are observed where these two foreign materials first come into contact (Misch 1999). The implants simulated in this study represent implants fabricated from pure titanium alloy and have an elastic modulus of 110000 MPa that is approximately five times greater than cortical bone. Therefore when the implants are loaded, the stress concentrations occur where the implant body first meets bone. This contact area is the crestal part of the alveolar ridge. The results of this

study agree well with the results of other clinical and experimental studies (Adell et al 1981, Henry et al. 1989, Bidez et al.1992, Misch 1999, Tepper 2002).

Another explanation why the recorded stress values are minimal at implant apexes might be the sufficient bone mass between the apexes of the implants and the sinus wall. For implant longevity in posterior region, it is important to maintain at least 1,0-1,5 mm of bone between the posterior sinus wall and the implant apexes. In a two-dimensional anatomic photoelastic study, Gross et al. has demonstrated the importance of sufficient apical bulk of supporting structures in producing a resistance and reactive force to axial pressure (Gross et al. 2001). In the present study this principle is applied to tuber implants, too. The implants are simulated with different inclinations in respect to occlusal plane, but always parallel to the posterior sinus wall with sufficient bone plates (at least 1,2 mm) between the entire implant body and posterior sinus wall. The bone width between the implant surface and the sinus wall is modeled individually for each implant inclination. When the results of this numerical study relate to clinical studies, it is necessary to point out that the load bearing capacity of implant sides vary greatly and it might not always be possible to have optimal amount of bone volume between the entire implant body and posterior sinus wall. Therefore it is advised to make more accurate bone quantity evaluations in the posterior region of the maxilla before planning and/or operating a tuberosity implant. This might necessitate the use of advanced radiological examination, such as computer tomography usage.

Not only the bone quantity evaluation but also the bone quality evaluation is of vital importance in planning an implant placement. Generally in posterior maxillary sectors, low-density bone is found (Lekholm & Zarb 1986,Martinez et al. 2001) and the osseointegrated implants show lower success rate in poor bone quality. In this numerical study the bone quality of the models is assumed to be optimal for an implant placement. But in reality it is nearly impossible to have such a high bone quality when the alveolar bone shows high degree of bone atrophy. Because severe alveolar atrophy often results in a residual ridge with decreased amount of cortical layer, which reduces primary stabilization of osseointegrated implants in bone. Therefore the results of this *in vitro* study relate to clinical applications so long as the bone quality of the patients enables primary stabilization of the implants in reality.

In the present study the recorded maximum tensile and compressive stress levels around the vertically placed and angled implants seem to have significant differences. Only the load application point causes similar stress distribution around the implants in all models. The anterior and posterior loads lead to approximately the same level of stresses around vertically placed implant (Table 6,7). The increase in the maximum tensile stress level in Model 1 is approximately % 3 as the point of load application moves posterior. Such an increase is accepted as insignificant and within normal limits. In other models representing the inclined tuberosity implants the results are similar, too. As the load application moves posterior, the amplitude of the stresses within bone increases but always within normal limits (Table 6,7).

However the axial and non-axial loads cause different stress distributions around the implants. Pure vertical loads lead to least stress concentrations in Model 1 and the highest in Model 6 (Table 6,7). According to the results of the present finite element study, it can generally be stated that the stress and strains around the tilted implants under pure axial loads increase slightly as the implant inclination increases. This numerical result coincided with the results of clinical studies (Venturelli 1996, Krekmanov et al 2000). However all axial loads lead to acceptable level of tensile and compressive stresses around the vertically placed and tilted tuberosity implants. When the magnitude of the stresses due to axial and non-axial loads are compared, the mean tensile stress value due to vertical loads is nearly ten times lower than oblique loads. This result supports the results of various previous *in-vivo* and *in-vitro* studies, which has demonstrated that the vertical loads can be better tolerated than the horizontal loads (Weinberg 2001, Rangert et al 1997 (a), Kohavi 1995, Cehreli et al 2002). But there is an exception. Only the implant with an inclination of 40° shows high level of stress concentrations under vertical loading.

According to the results of this study, operating a tuberosity implant with an inclination of 40° is not advisable. During the masticatory movements, a tuberosity implant with such an inclination will be loaded not only with vertical forces but also with oblique forces. When pure vertical loads cause high levels of stresses, the real masticatory forces will lead to excessively high stress concentrations that can exceed the physiologic tolerance threshold of bone. And this may result in marginal bone loss or even complete loss of osseointegration (Van Oosterwyck et al 2002, Ducky et al 2000). The increased implant torque may explain this. In such a case, a long-working arm is generated and the resultant line of force pass away from the supporting bone, increasing the horizontal implant offset. When an implant should be placed with an inclination more than 35°, some prosthetic or occlusal proposals might be recommended in order to improve the stress

distributions. The prosthesis can be placed in cross-occlusion (Weinberg 2001). This will reduce the horizontal implant offset. In addition to this, cusp inclination of the prosthesis can be decreased. Shallow cusp will help to distribute the horizontal forces better and reduce the torque producing forces. Bending moments can be reduced on the implant by creating true cup-to-fossa relationship and/or decreasing the inclination of the cuspal contact of the opposing teeth. An angulated or custom angulated abutment may be used in order to provide parallelism and favorable occlusal contacts. The 'long centric' concept may also be applied. This technique, described by Mann and Pankey, is designed to produce a modified occlusal anatomy containing a 1,5 mm horizontal fossa (Mann & Pankey 1960). With this configuration, the mandibular cusps will be able to have a lateral shift in centric occlusion producing buccal or lingual inclined resultant lines of force within the expected range of physiologic limits (Weinberg 2001).

When the effects of oblique forces are examined around the implants in the present study, it is seen that the non-axial loads lead to high stress values in all models. Although slightly inclined horizontal force (Load VI) leads to least stress and strain around vertically placed implant, highly inclined non-axial loads (Load VII and VIII) lead to higher stress peaks around the same implant. The magnitudes of stresses under oblique forces decrease slightly as the inclination of implant increases. An inclination of 35° with respect to horizontal plane seems to be the most favorable inclination for an implant placement in tuber region. According to the results of present study, this angulation is the optimal inclination that minimizes the potentially injurious effects of horizontal forces. This result supports the clinical studies, too (Aparicio et al 2001,Krekmanov et al 2000, Nocini et al 2000, Venturelli et al 1996,Bahat 1992). Most of these suggest an inclination of 30°-35° for a tuberosity implant placement. Such an inclination has a very important biomechanical advantage. This inclination enables the placement of implant head in the middle of the bucco-palatinal width of the dental arch, which makes it possible to place the implant head over the midline of the restoration. This implant-abutment configuration will produce a resultant line of force passing through the implant long-axis.

8.3 Anchorage System

When edentulous maxillary dental arches are restored with osseointegrated dental implants, due to the adverse morphological characteristics of upper jaw, such as, implant-retained overdentures are the choice of treatment (Zarb & Schmitt, 1995). A variety of individual attachments and bars are used to anchor the overdentures to implants. On the basis of scientific data, it is suggested that the retention device should be selected according to the specific clinical and individual needs of the patient. In edentulous maxilla generally six implants are placed and distributed along the maxillary arch, and rigidly connected with a bar superstructure (Lewis 1993). The ideal prosthetic restoration supported by tuberosity implants is a fixed palataless unit with cross-arch stabilization. The rigid bar attachment provide better retention, specially in case of advanced alveolar atrophy (Merickse-Stern, 1996 (a)). Because of the explained reasons above, the rigid bar attachement is thought as the superstructure in this numerous study. . This underline the need for optimal prosthesis design for implant retained reconstructions.

SUMMARY:

Prosthetic rehabilitation of edentulous maxillary arches involves obvious problems for patients as well as restorative dentists. When an implant-retained prosthesis is considered, more satisfactory results can be obtained. But the anatomy and the bone quality of the maxilla limit the usage of osseointegrated implants in prosthetic treatment or necessitate advanced surgical procedures. The use of tuberosity implants is becoming increasingly involved in comprehensive implant treatment in order to over come the problem of insufficient bone volume and to avoid surgical procedure.

There are limited numbers of studies on tuberosity implants, many of which have examined either the success and/or survival rate of the implants in the posterior maxilla, or discussed the surgical difficulties of the region, recommending a new surgical technique. None of them has evaluated the biomechanical factors related to implant tilting.

This study is designed to examine in-vitro the magnitude and character of the loads acting on the tilted implants in the tuberosity region.An anatomical three-dimensional (3D) finite element (FE) model of an atrophied maxilla was constructed to calculate the stress and strains around the implants. The 3-dimensional finite element-processing program ANSYS version 6.1 was used to perform the analysis

The effect of implant tilting on bone loading was studied for cylindrical Ti implants placed in maxilla in “Spread-out” configuration. Three implants were placed in the lateral incisor region, second premolar region and tuber region symmetrically. The implants in tuber region were tilted with different angles in respect to occlusal plane (20°, 25°, 30°, 35°, 40°). The implants were connected with a horseshoe shaped bar. The superstructure was identical in each model to allow for comparison of the results. In this study to stimulate masticatory forces, vertical and horizontal loads of 100 N were applied to the centre of superstructure as point loads. A vertical load (was parallel to implant axis) was applied in the regions of 013, 015, and 017 symmetrically. An oblique load of 100 N was applied in the region of 016 inclined posteriorly 15°, 30°, 45° relative to implant axis, and 15°, 30°, 45° away from the sagittal plane.

According the results of this numerical study the tuberosity area can be used for implant placement. In all models regardless of implant inclination, the highest stress peak points are chiefly observed in the cervical cortical bone at the mesial implant surfaces, distributing in a mesial-palatinal direction. The value of tensile and compressive stresses around the tilted implants due to horizontal and vertical loads are within normal limits. The magnitude of tensile stresses and von Mises' equivalent stresses decreases as the implant inclination increases. The oblique loads are better tolerated by the implants than the vertical loads. This numerical result coincided with the results of clinical studies.

LITERATUR:

1. Adell R., Lekholm U., Rockier B., Brånemark PI (1981) A 15-year study of osseointegrated implants in the treatment of edentulous jaws. *Int J Oral Surg* 10 :387-416
2. Adell R., Eriksson B., Lekholm U., Brånemark PI., Jemt T. (1990) Long-term follow- up study of osseointegrated implants in the treatment of totally edentulous jaws. *Int J Oral Maxillofac Implants* 5:347-359
3. Agerberg G., Carlsson GE. (1981) Chewing ability in relation to dental and general health: analysis of data obtained from questionnaire. *Odontol Scand* 39:147
4. Akca K. & Iplikcioglu H. (2001) Finite element analysis of the influence of staggered versus straight placement of dental implants *Int J Oral Maxillofac Implants* 16:722-730
5. Akpinar I, Demiral F, Parnas L, Sahin S. (1996) A comparison of stress and strain distribution characteristics of two different rigid implant designs for distal-extension fixed prosthesis. *Quintessence Int*. 27:11-7
6. Albrektsson T., Brånemark PI., Hannsson HA & Lindström J. (1981) Osseointegrated titanium implants. Requierements for ensuring a long- lasting direct bone anchorage in man. *Acta Orthopaedica Scandinavica.* 52:155-170
7. Albrektsson T., Brånemark PI., Hannsson HA., Kasemo B., Larsson K., Lindström J., Mc Queen D. & Skalak R. (1983) The interface zone of inorganic implants in vivo: Titanium implants in bone. *Annals Biomed Engineering* 11:1-27
8. Albrektsson T., Zarb D., Worthington P., Eriksson A. R. (1986) The long term efficacy of currently used dental implants: a review and proposed criteria of success. *Int J Oral Maxillofac Implants* 1(1):11-25.
9. Albrektsson T. & Jacobsson M. (1987) Bone-metal interface in osseointegration. *J Prosthet Dent* 57(5):595-607
10. Albrektsson T., Dahl E., Enbom L., Engevall S., Enquist B.,Eriksson AR. (1988) Osseointegrated oral implants. A swedisch multicenter study of 8139 consecutively inserted Nobelpharma Implants. *J Periodontol* 59:287-296
11. Andrews R. R. (1893) Prehistoric crania from central America. *Int Dent J* 3:914-915
12. Assif D., Marshak B.&Horowitz A. (1996) Analysis of load transfer and stress distribution by an implant supported fixed partial denture. *J Prosthodont* 75:285-92
13. Atmaram GH, Mohammed H. (1983-1984) Stress analysis of single-tooth implants.1. Effect of elastic parameters and geometry of implant. *Implantologist* 3:24-29
14. Atmaram GH. Mohammed H. (1983-1984, (a)) Stress analysis of single-tooth implants.11. Effect of root length variation and pseudo periodontal ligament incorporation. *Implantologist* 3:58-62
15. Babbusch CA., Kent JN., Misiek DJ. (1986) Titanium plasma- sprayed (TPS) screw implants for the reconstruction of the edentulous mandible. *J Oral Maxillofac Surg* 44:274-82
16. Bahat O. (1992) Osseointegrated implants in the maxillary tuberosity: Report on 45 consecutive patients. *Int J Oral Maxillofac Implants* 7:459-467
17. Balschi TJ., Lee HK. & Hernandez RE. (1995) The use of pterygomaxillary implants in the partially edentulous patient: A preliminary report. *Int J Oral Maxillofac Implants* 1:89-97
18. Barbier L & Schepers E. (1997) Adaptive bone remodeling around oral implants under axial and nonaxial loading conditions in the dog mandible. *Intl J Oral Maxillofacl Implants* 12:215-223
19. Barbier L., Sloten JV., Krzensinki G., Schepers E & Van Der Perre (1998) Finite element analysis of non-axial versus axila loading of the implants in the mandible of the dog. *Int J Oral Maxillofac Implants* 25 :847
20. Becker W., Becker BE., Alsuwyed A., Al-Mubarak S.(1999) Long.trm evaluation of 282 implants in maxillary and mandibular molar position: a prospective study. *J Periodontol* 70(8):896-901
21. Belser U., Bernard J.P., Martinet J.P., Hess D. (1996) " Fixed prosthetic restorations ". In; Schroeder A., Sutter F., Buser D., Krekeler G. (2.eds). Oral Implantology Georg Thieme Verlag Stuttgart New York. 374-420
22. Benzig UR., Gall H., Weber H. (1995) Biomechanical aspects of two different implant- prosthetic concepts for edentulous maxillae. *Int J Oral Maxillofac Implants* 10:188-198

23. Benzig UR, Pröbster L, Weber H, Gall H. (1996) Die implantologisch-prothetische Versorgung des zahnlosen Oberkiefers- biomechanische Analyse vs. klinischer Befund. *Z Zahnärtzlich Implantol* 12;35-42
24. Berry A.(1888) Lead roots of teeth for implantation. *J Dent Sci* 8:549-553
25. Beumer H III., Hamada M.O., Lewis S. (1993) A Prosthodontic Overview. *Int J Prosthodont* 6:126-130
26. Bidez MW. & Misch CE. (1992) Force transfer in implant dentistry: basic concepts and principles. *J Oral Implantol* 18(3): 264-74
27. Binon PP. (2000) Implants and components: Entering the new millenium. . *Int J Oral Maxillofac Implants* 51(1):76-
28. Bodine R.L., and Yanase R.T. (1985) Thirty-year report on 28 implant dentures inserted between 1952 and 1959. Paper presented at the Symp. On Preprosthetic Surgery, Palm Springs, CA, May 16-18
29. Brandt Hans H. (1996) Einleitung . In; Brandt Hans H (eds). Einführung in die Implantologie München; Wien; Baltimore: Urban und Schwarzenberg 1- 4.
30. Brandt Hans H. 1996 (a) "Nominelle Zuordnung". In Brandt Hans H Einführung in die Implantologie München; Wien; Baltimore: Urban und Schwarzenberg, 5- 13
31. Brånemark P-I., Adell R., Breine U., Hansson B.O., Lindstrom J., Ohlsson A. (1969) Intra-osseous anchorage of dental prostheses. Experimental studies. *Scand J Plast.Reconstr. Surg* 3:81-100
32. Brånemark PI., Hannsson BO., Adell R., Breine U., Lindström J. & Öhman A. (1977) Osseointegrated implants in the treatment of the edentulous jaw. Experience from a 10 year period. *Scandinavian J Plastic Recons Surg* 16 (Suppl)
33. Brånemark P-I. (1985) "Introduction to osseointegration ". In Brånemark P-I, Zarb GA, Albrektsson T (eds.) Tissue- Integrated Prostheses: Osseointegration in Clinical Dentistry. Chicago: Quintessence, 11-76
34. Brånemark PI.,Svennson B., van Steenberghe D., Darius D. (1995) Ten year survival rates of fixed prostheses on four or six implants ad modum Brånemark in full edentulism. *Clin Oral Implants Res* 6 :227-31
35. Brosh T, Raphael P, Sudai D.(1998) The influence of abutment angulation on starins and stress along the implant/bone interface: comparison between two experimental techniques. *Journal of Prosthetic Dentistry* 79: 328-34
36. Brunski JB. (1988) Biomaterials and biomechanics in dental implant design. *Int J Oral Maxillofac Implants* 3(2) :85-97
37. Brunski JB (1992) Biomechanical factors affecting the bone-dental implant interface. *Clinical Materials* 153-201
38. Buser D., Schenk RK., Steinemann S., Fiorellini JP., Fox CH. & Stich H. (1991) Influence of surface characteristics on bone integration of titanium implants. A histomorphometric study in miniature pigs. *J Biomed Materials Res* 25:889-902
39. Buser D, Mericske-Stern R, Bernard JP, Behneke A, Behneke N, Hirt HP, Belser UC, Lang NP. (1997) Long term evaluation of non-submerged ITI implants. Part 1: 8-year life table analysis of a prospective multicenter study with 2359 implants. *Clin Oral Implants Res* :161-172.
40. Buser D, Nydegger T., Hirt HP., Cochran DL., Nolte LP. (1998) Removal torque values of titanium implants in the maxilla of miniature pigs. *Int J Oral maxillofac Implants* 13 :611-9
41. Carlsson L., Rostlund T., Albrektsson T. Brånemark P-I, (1986) Osseointegration of titanium implants. *Acta Orthop Scand* 57:285-289
42. Carter Dr., Spengler DM. (1978) Mechanical properties and composition of cortical bone. *Clin Orthop* 135 :192-264
43. Carvalho Lamano Tl, Cavacanti CA., Araujo A., Teofilo JM., Brentegani LG. (1997) Histologic and histometric evaluation of rat alveolar wound healing around polyurethane resin implants. *Int J Oral Maxillofac Surg* 26:149-152
44. Cawood JI., Howell RA. (1988). A classification of edentulous jaws. *Int Oral Maxillofac Surg* 17:232-236
45. Cehreli MC, Iplikcioglu H, Bilir ÖG. (2002) The influence of the location of load transfer on strains around implants supporting four units of axial versus off-set loading. *Journal of Oral Rehabilitation* 29:394-400.

46. Celland N., Gilat A., McGlummphy E., Brantley W. (1993) A photoelastic and starin gauge analysis of angled abutments for an implant system. *Int J Oral Maxillofac Implants* 8 :541-548
47. Celland N., Lee J., Bimbenet O., Brantley W. (1995) A three-dimensional finite element analysis of angled abutments for an implant placed in the anterior maxilla. *J Prosthodont* 4 :95-100
48. Clepperd D. (1999) Classification system for Implant-supported overdentures. *Implant Dent* 8:68-73
49. Cook SD, Weinstein AM, Klawitter JJ. (1982) Three-dimensional finite element analysis of porous rooted Co-Cr-Mo alloy dental implants. *J Dent Res* 61:25-9
50. Cook SD., Thomas KA., Dalton JE., Volkman TK., White cloud TS & Kay JF (1992) Hydroxyapatite coating of porous implants improves bone ingrowth and interface attachment strength. *J Biomedical Material Res* 26:989-1001
51. Cune Ms., de Putter C., Hoogstraten J. (1994) treatment outcome with implant retained overdentures: part-I clinical findings and predictability of clinical treatment outcome. *J Prosthet Dent* 72:144-51
52. Davarpanah M., Martinez H., Etienne D., Zabalegiu I., Mattout P., Chirche F., Michel JF. (2002) A prospective multicenter evaluation of 1283 3i implants : 1- to5-year data. *Int J Oral Maxillofac Implants* 17(6):820-828
53. Davis JE. (1998) Mechanism of endosseous integration. *Int J Prosthodont* 11:391-401
54. Davis MD. (1990) The role of implants in the treatment of edentulous patients. *Int J Prosthodont* 3:42-50
55. Del Valle V, Faulkner G, Wolfaardt J. (1997) Craniofacial osseointegrated implant- induced strain distribution: a numerical study. *Int J Oral Maxillofac Implants* 12:200-2
56. DeTolle DH., Andreana S., Patra A., Buhite R., Comella B. (2000) The role of the finite element model in dental implants. *J Oral Implantol* 2(26) :77- 81
57. Dover MS. (1999) Oral Implantology. In Maxillofacial Surgery Booth PW., Schendel SA., Hausamen Jorg-Erich (eds). Edinburg, London, New York, Philadelphia, San Francisco, Sydney: Churchill Livingstone; 1563-1582
58. Duyck J., Van Oosterwyck H., Vander Sloten J., De Cooman M., Puers R., Naert I. (2000) Magnitude and distribution of occlusal forces on oral implants supporting fixed protheses: an *in vivo* study. *Clin. Oral Impl. Res*, 11: 465-475
59. Duyck J, Naert I., Van Oosterwyck., Ronold HJ., Vander Sloten J., Ellingsen J. (2001) The influence of static and dynamic loading on marginal bone reactions around Osseointegrated implants: an animal experimental study. *Clin. Oral Impl. Res* 12:207-18
60. Ekfelt A, Johannsson LA, Christiansson U, Eriksson T, Linden U, Lundqvist S, Rundcrantz T, Nilner K, Billström C. (2001) A retrospective analysis of factors associated with multiple implant failures in maxillae. *Clin. Oral Impl. Res*, 12(5); 462
61. Ellingsen JE. (1998) Surface configurations of dental implants *Periodontology 2000* 17:36-46
62. Engelke W., Diederichs C., Jacobs H.& Deckwer I. (1997) Alveolar reconstruction with splitting osteotomy and microfixation of implants. *Int J Oral Maxillofac Implants* 12 :310-318
63. Enquist B., Bergendal T.,Kallus T., Linden U.,(1988) A retrospective multicenter evaluation of osseointegrated implants supporting overedntures. *Int J Oral Maxillofac Implants* 3 :129-134
64. Ettinger RL. (1973) Diet, nutrition, masticatory ability in groups of elderly edentulous patients. *Aust Dent J* 18:12-19
65. Frandsen PA., Christoffersen H, Madsen T. (1984) Holding power of different screws in the femoral head. A study in human cadaver hips. *Acta Orthop Scand* 55:349-351
66. Frost H.M. (1987) The Mechanostat. A proposed pathogenic mechanism of osteoporoses and bone mass effects of mechanical and non-mechanical agents. *Bone and Mineral*; 12;73-85
67. Geng JP, Tan K, Liu GR. (2001) Application of finite elemente analysis in implant dentistry. *Journal of Prosthetic Dentistry* 85: 585-98
68. Geiger S.& Pesh H. (1977) Animal and experimental studies of the healing around ceramic implants in bone lesions in the maxillary sinus region. *Dtsch Zahnärtzl Z* 32:396
69. Glantz P-O.(1998) The choice of alloplastic materials for oral implants. Does it really matter? *Int J Prosthodont* 11:402-407
70. Glantz P-O, Rangert B, Stevenson A, Stafford G.D., Arnvidarson B, Randow K, Lindn U, Hulten J. (1993) On clinical loading of osseointegrated implants *Clin. Oral Impl. Res* 4: 99-106
71. Glantz P-O, Nilner K (1998) Biomechanical aspects of prosthetic implant-bone reconstructions. *Periodontol 2000*17:119-124
72. Grandt JCB. (1956) An atlas of anatomy. Baltimore: Williams& Wilkins. 541

73. Greenfield E.J. (1910) An artificial root. Dent Brief;15:837
74. Gross M, Nissan J, Samuel R. (2001) Stress distribution round maxillary implants in anatomic phoelastic models of varying geometry. Part 1. *J Prosthet Dent* 2001;85:442-9.
75. Grunder U., Boitel N., Imoberdorf M., Meyenberg K., Meiter T. & Andreoni C. (1999) Evalauting the clinical performance of the Osseotite Implant: defining prosthetic predictability. *Compendium* 20:544-554
76. Hahn H., Palich W. (1970) Preliminary evaluation of porous metal surfaced titanium for orthopedic implants. *J Biomed Mater Res* 4:571-579
77. Haraldson T., Karlsson U., Carlsson GE. (1979) Bite forces and oral function in complete denture wearers. *J Oral Rehabil* 6:41-48
78. Haraldson T., Carlsson GE., Ingervall B. (1979 (a)) Functional state, bite force and postural muscle activity in patients with Osseointegrated implant bridges. *Acta Odontologica Scandinavia* 37:195-206
79. Hench LL, Wilson J. (1984) Surface-active biomaterials. *Science* 226:630-636
80. Higucci KW., Folmer T., Kultje C. (1995). Implant survival rates in partially edentulous patients; a 3-year prospective multicenter study. *J Oral Maxillofac Surg* 53 :264-8
81. Hobkirk JA., Havthoulas TK. (1998) The influence of mandibular deformation, implant numbers and loading position on detected forces in abutments supporting fixed implant superstructures. *J Prosthet Dent* 80:169
82. Holmes DC & Loftus JT. (1997) Influence of bone quality of stress distribution for endosseous implants *J Oral Implantol* 23:104-111
83. Hoshaw SJ, Brunski JB& Cochran G.V.B. (1994) Mechanical loading of Bränemark implants affecting interfacial bone modeling and remodeling. *Int J Oral Maxillofac Implants* 9:345-360
84. Hutton JE., Heath F., Chai JY., Harnett J., Jemt T., Johns RB., McKenna S., McNamara DC., van Steeberghe D., Taylor R., Wtson RM & Hermann L. (1995) Factors related to success and failure rates at 3 year follow-up in a multicenter study of overdentures supported by Brånemark implants. *Int J Oral Maxillofac Implants* 10:33-42
85. Isidor F. (1997) Loss of osseointegration caused by occlusal load of oral implants. A clinical and radiographic study in monkeys. *Clin. Oral Impl. Res*, 7:143-152.
86. Ismail YH, Pahountis LN & Fleming JF. (1987) Comparison of two-dimensional und three-dimensional finite elment anlysis of a blade implant. *International Journal of Oral and Maxillofacial Implants* 4:25-31
87. Ivanoff C-F., Senbnerby J., Johansson C., Rangert B., Lekholm U. (1997) Influence of implant diameter on integration of screw implants an experimental study in rabbits. *Int J Oral Maxillofac Surg* 26:141-148
88. Jäger K, Wirz J. (1993) In- vitro-Spannunganalysen an Implantaten in Abhängigkeit von den hybridprothetischn Suprakonstruktionen. *Z Zahnärtzlich Implantol* 9;42-49.
89. Johns RB., Jemt T. & Heth MR. (1992) A multicenter study of overdentures supported by Brånemark implants. *Int J Oral Maxillofac Implants* 7 :513-522
90. Jemt T. (1991) Failures and complications in 391 consecutively fixed prostheses supported by Brånemark implants in edentulous jaws: A study of treatment from the time of prosthesis placement to first annual check-up. *Int J Oral Maxillofac Implants* 6:270-276
91. Jemt T., Carlsson L., Boss A.& Jornus L. (1991, (a)) In vivo load measurements on Osseointegrated implants supporting fixed or removable prosthesis: a comparative pilot study. *Int J Oral Maxillofac Implants* 6:413
92. Jemt T, Book K, Linden B & Urde G. (1992) Failures and complications in 92 consecutively inserted overdentures supported by Brånemark implants in the severely resorbed edentulous maxilla. A study from prosthetic treatment to first annual check-up. *Int J Oral Maxillofac Implants* 7:162-167
93. Jemt T. (1993) Implant treatment in resorbed edentulous upper jaws. A three-year follow-up study on 70 patients. *Clin Oral Impl Res* 4 :187-194
94. Jemt T, Book K& Karlsson S. (1993 (a)) Occlusal force and mandibular movements in patients with removable and fixed prostheses supported by implants in the maxilla. *Int J Oral Maxillofac Implants* 8:301-308
95. Jemt T. (1994) Fixed implant supported prosthesis in the edentulous maxilla: a five-year follow-up report. *Clin Oral Imp Res* 5 :142-7
96. Jemt T., Chai JY., Harnett J., Heath R., Hutton JE., Harnett J., Johns RB., McKenna S., McNamara DC., van Steeberghe D., Taylor R., Watson RM & Hermann L. (1996) A 5 year prospective

multicenter follow- up report on overdentures supported by osseointegrated implants. *Int J Oral Maxillofac Implants* 10:33-42

97. Kasemo B. Lausmaa J.(1985) Metal selection and surface characteristics. In Brånemark P-I., Zarb GA., Albrektsson T. (eds.) Tissue- Integrated Prostheses: Osseointegration in Clinical Dentistry. Chicago: Quintessence, 99-116
98. Kawasaki T, Takayaam T, Yamada T, Notani K. (2001) Relationship between stress distribution and the shape of the alveolar residual ridge - three-dimensional behavior of a complete denture. *J Oral Rehabil* 2001;28:950-957.
99. Kenney EB., Jovanovic S. (1993) Osteopromotion to osseointegration. *Int J Prosthodont* 6:131-136
100. Kenney R, Richards MW (1998) Photoelastic stress patterns produced by implant- retained overdentures.. *Journal of Prosthetic Dentistry* 80: 559-64
101. Khayat P.& Nader N. (1994) The use of Osseointegrated implants in the maxillary tuberosity. *Pract Periodont Aesthet Dent* 6:53-61
102. Kohavi D. (1995) Complications in the tissue integrated prostheses components: clinical and mechanical evaluation. *J Oral Rehabil.* 10:326-334. .
103. Krämer A., Weber H., Benzig UR. (1992) Implant and prosthetic treatment of the edentulous maxilla using a bar- supported prosthesis. *Int J Oral Maxillofac Implants* 7;251-255
104. Krekmanov L, Kahn M, Rangert B, Lindström H. (2000) Tilting of posterior mandibular and maxillary implants for improved prothesis support. *Int J Oral Maxillofac Implants* 15:405-414
105. Lacefield WR. (1998) Current status of ceramic coatings for dental implants *Implant Dent* 7:315-322
106. Lanyon LE. (1984) Functional strain as a determinant for bone remodelling. *Calcify Tissue Int* 36:556-561
107. Lazzara R., Porter S., Testori T., Galente J & Zetterquvist L (1998) A prospective multicenter study evaluating loading of Osseotite implants two months after placement. One-year results. *J Esth Dentistry* 10:280-89
108. Lazzara R., Testori T., Trisi P & Porter S (1999) A human histologic analysis of Osseotite and machined surface using implants with 2 opposing surfaces. *Int J Periodont Res Dentistry* 19:117-129
109. Ledermann PD. (1989) Die neue Ledermannschraube. *Swiss Dent* 10:31
110. Ledermann PD (1996) Über 20jährige Erfahrung mit der sofortigen funktionellen Belastung von Implantatstegen in der regio interforaminalis. *Z Zahnärztl Implantol* 12:123-136
111. Lekholm U., van Steenberghe D., Hermann I., Bolender C., Folmer T., Gunne J et all. (1994) Osseointegrated implants in the treatment of edentulous jaws: a prospective 5 year multicenter study. *Int J Oral Maxillofac Implants* 9:627-35
112. Lemons J.E. (1990) Dental implant biomaterials. *J Am Dent Assoc* 121:716
113. Lenz J, Freischläger C, Rong Q, Schweizerhof K, Schindler HJ, Riediger D. (2001) Zum Risiko der Implantatversorgung bei Bruxism. *Z Zahnärtzlich Implantol* 17(2);64-70
114. Lewis S. (1993) Implant- retained overdentures. *Compend Contin Educ Dent* 14(10):1272,1274-1283
115. Linkow L. (1966) Clinical evaluation of the porous designed endosseous implants. *J Oral Implantol Transplant Surg* 12:35-44
116. Mailath G., Schmid M., Lill W., Miller J. (1991) 3D-Finite Elemente Analyse der Biomechanik von rein implantatgetragenen Extensionsbrücken. *Z Zahnartztl Implantol* VII:205-211
117. McElhaney JH., Fogle JL., Melvin JW., Haynes RR., Roberts VL., Alem NM. (1970) Mechanical properties of cranial bone. *J Biomec* 3:495-511
118. Meffert RM., Langer B., Fritz ME., (1992) Dental implants: A review. *J Periodontol* 63.859-870
119. Menicucci G, Lorenzetti M, Pera P, Preti G. (1998) Mandibular implant-retained overdenture: finite element analysis of two anchorage systems. *Int J Oral Maxillofac Implants* 13;369-376.
120. Menicucci G, Mossolav A, Mozzati M, Lornzetti M, Preti G. (2002) Tooth-implant connection: some biomechanical aspects based on finite element analysies. C*lin. Oral Impl. Res.* 13;334-341.
121. Mericske-Stern R, Assal P. & Buergin W (1996) Simulataneous force measurements in 3 dimensions on oral endosseous implants *in vitro* and *in vivo. Clin. Oral Impl. Res* 7: 378-386.
122. Merickse-Stern R. (1996, (a)) "Overdentures Supported by ITI Implants" In; Schroeder A., Sutter F., Buser D., Krekeler G. (2.eds). Oral Implantology Georg Thieme Verlag Stuttgart New York. 80-110

123. Merickse-Stern R. (1998) Treatment outcomes with implant supported overdentures: Clinical considerations. *J Prosthet Dent* 79:66-73
124. Merickse-Stern R., Taylor TD., Belser U. (2000) Management of edentulous patient. *Clin Oral Impl Res* 11(Suppl.):108-125
125. Meroueh KA, Watanabe F, Mentag PJ. (1987) Finite element analysis partially edentulous mandible rehabilitated with osseointegrated cylindrical implants. *J Oral Implantol* 13;215-38.
126. Mohammed H, Atmaram GH., Schoen FJ.(1979) Dental implant design: a critical review. *J Oral Implantol* 8;393-410.
127. Misch CE (1999) implant design considerations for the posterior regions of the mouth *Implant Dentistry* 8(4):376-85
128. Narhi TO., Hevingo M., Voorsmit RA.., Kalk W. (2001) Maxillary overdentures retained by splinted and unsplinted implants; a retrospective study. *Int J Oral Maxillofac Implants* 16(2):259-266
129. Nentwig HG. (1996) Knochenspreizung und Knochenkondensierung zur Verbesserung des Implantatlagers. *Quintessenz* 47:7-17
130. Neukam FW., Kloss FR. (2002) Compromised Jaw Bone Quantity and Its Influence on Oral Implant Placement. In: Zarb G., Lekgolm U.,Albrektsson T., Tenenbaum H. (eds) Aging, Osteoporosis and Dental Implants. Chicago: Quintessence, 85-97
131. Nevins M, Langer B. (1993) The successful application of osseointegrated implants to the posterior jaw: a long-term retrospective study. *Int J Oral Maxillofac Implants* 8 :428-32
132. Nevins M, Mellonig JT., Clem DS., Reiser G., Buser DA. (1998) Implants in degenerated bone: long term survival. *Int J Periodont Rest Dent* 18:35-45
133. Ney T. (1987) Zur Kinematik von Implantaten und natürlichen Zahnen. *Dtsch. zahnärztl Z.* 42:1039-1044
134. Ney T, Schulte W. (1988) Implantatbelastung durch Knochendeformation im interforaminalen Bereich des Unterkiefers bei funktioneller Beansprunchung. *Z. Zahnärtztl. Implantol* 4:109
135. Newesely H. (1981) Implantatmaterialien. In: Eichner K. Zahnärztliche Werkstoffe und ihre Verarbeitung. Hüthig, Heidelberg
136. Naert I., Quirynen M., van Steenberg D., Darius P. (1992) A six-year prosthodontic study of 509 consecutively inserted implants for the treatment of partial edentulism. *J Prosthet Dent* 67:236-45
137. Noccini PF., Albanese M., Fior A., De Santis D. (2000) Implant placement in the maxillary tuberosity: the Summerss' technique performed with modifies osteotomes. *Clin Oral Impl Res* 11:273-278
138. Parr Gr, Gardner LK, Toth RW. (1985) Titanium: The mystery metal of implant dentistry. Dental materials aspects. *J Prosthet Dent*;54(3):410-414
139. Rangert B, Sennerby L, Meredith N& Brunski JB (1997) Design, maintenance and biomechanical considerationsin implant placement. *Dental Update* 1997;24:416-420
140. Rangert B, Krogh PHJ, Langer B, Van Roekel NB. (1997 (a)) Bending overload and implant fracture. *Int J Oral and Maxillofac Implants* 12:215-223
141. Regev E., Smith RA., Perrot DH., Pogrel MA. (1995) Maxillary sinus complications related to endosseous implants *Int J Oral Maxillofac Implants* 10:451-461
142. Reilly DT., Burstein AH. (1975) The elastic and ultimate properties of compact bone tissues.*J Biomech* 8(6):393-405
143. Renner P., Romanos G.& Nentwig G. (1996) Die Knochenspreizung bei der Implantation im redizuerten Alveolarfortsatz des Oberkiefers. *Deutsche Zahnärtzl Z.* 51:118-120
144. Richter E-J. (1986) Ein Beitrag zur Erläuterung des Begriffs Stoßdämpfung in der Implantologie. *Z Zahnärrztl Implantol* 2:270-273
145. Richter E-J. (1992) The Verbundbrücke zwischen Zahn und Implantat: Ergebnisse experimenteller und klinisher Untersuchung (thesis) Germany: University of Aachen.
146. Ring ME. (1995) A thousand years of dental implants: A definitive history- Part 1. *Compend Contin Educ Dent* 1995; 16:1060-1069
147. Ring ME. (1995) (a) A thousand years of dental implants: A definitive history- Part 2. *Compend Contin Educ Dent* 1995; 16:1060-1069
148. Roberts WE. (1993) Fundamental principles of bone physiology, metabolism and loading. In Naert I., van Steenberghe D.,Worthington P. (eds) Osseointegration in oral rehabilitation. An introductory textbook. London: Quintessence 163-4

149. Rosenberg ES, Torosion JP & Slots J. (1991) Microbial differences in 2 clinically distinct types of failures of osseointegrated implants. *Clin. Oral Implan Res* 2:135-144
150. Roux W. (1881) Der züchende Kampf der Theile, oder die Thielauslese im Organismus. Zugleoch eine Theorie der funktionellen Anpassung. Verlag von Wilhelm Engelmann
151. Rubeling G. (1982) Funkenerosion in der Zahntechnik Möglichkeiten and Grenzen. *Dental Labor* 30:1697
152. Sadowsky SJ (1997) The implant- supported prosthesis for edentulous arch: Design considerations. *J Prosthet Dent* 78:28-33
153. Sahin S., Cehreli CM., Yalcin M. (2002) The influence of functional forces on the biomechanics of implant- supported prostheses- a review. *J Dentist.* 30:271-282
154. Schnittmann PA., Schulman LB. (1979) Recommendation of the consensus development conference on dental implants. *J Am Dent Assoc* 98:373-377
155. Schroeder A., Pohler O., Sutter F. (1976) Gewebereaktion auf ein Titan- Holzylinderimplantat mit Titan- spritzschicht- oberfläche. *Schweiz Mschr Zahnheilk* 86:713-727
156. Schroeder A., Stich H., Straumann F., Sutter F. (1978) Über die Anlagerung von Osteozement an einen belasteten Implantatkörper. *Schweiz Mschr Zahnheilk* 88:1051
157. Schroder A, (1996) " A Brief History of Implantology". In; Schroeder A., Sutter F., Buser D., Krekeler G. (2.eds). Oral Implantology Georg Thieme Verlag Stuttgart New York. 60-63
158. Schroder A & Buser D. with a contribution by Sutter F. (1996) " Tissue Response ". In; Schroeder A., Sutter F., Buser D., Krekeler G. (2.eds). Oral Implantology Georg Thieme Verlag Stuttgart New York. 80-110
159. Scortecci GM. (1991) Diskimplant system yields tricortical support to make the most of available bone. *Dent Implantol Update* 2:72-74
160. Simon BR, Woo SL-Y, Stanley GM, Olmstead SR, McCarty MP, Jemmott Gf et all. (1977) Evaluation of one, two, three-dimensional finite element and experimental models of international fixation plates. *J Biomechanic* 10;79-86.
161. Skalak R. (1983) Biomechanical considerations in osseointegrated prostheses. *J Prosthe Dent* 49(6): 843-848
162. Smedberg JI., Lothigus E., Bodin I., Frykholm A., Nilner K. (1993) A clinical and radiological two- year follow-up study of maxillary overdentures on Osseointegrated implants. *Clin Oral Implants Res* 4 :39-46
163. Smith DC. (1993) Dental Implants: Materials and Design Considerations. *Int J Prosthodont* 6:106-117
164. Sobotta
165. Southan JC, Selwyn P. (1970) Structural changes around screws used in the treatment of fractured human mandibles. *Br J Oral Surg* 8:211
166. Spiekermann H. (1994) Biomechanics In: Rateitschak KH, Wolf HF (eds). Farbatlanten der Zahnmedizin, Band :10 Implantologie. Georg Thieme Verlag Stuttgart New York ;
167. Standford CM. (1999) Biomechanical and functional behavior of implants. *Adv Dent Res* 13:88-92
168. Stanford CM.& Richard AB. (1999) Toward an understanding of implant occlusion and strain adaptive bone modeling and remodeling. *J Prosthet Dent* 1999;81:553-61.
169. Stegaroiu R., Sato T., Kusakari H., Miyakawa O. (1998) Influence of restoration type on stress distribution in bone around implants: a three-dimensional finite element analysis *Int J Oral Maxillofac Implants* 13:82-90
170. Stritzel FP., Nowak M., Küchler I., Friedman A. (2002) Peri-implant alveolar bone loss with respect to bone quality after use of the osteotome technique *Clin Oral Impl Res.* 13:508-513
171. Sullivan D., Sherwood R. & Mai T (1997) Preliminary results of a multicenter study evaluating a chemically enchanted surface for machined commercially pure titanium implants. *J Prosthetic Dentistry* 78: 379-86
172. Summers RB. (1994) A new concept in maxillary implant surgery: the osteotome technique. *Compend Contin Educ Dent* 2:152-160
173. Sykaras N., Iacopino AM., marker AV., Triplett RG., Woody RD. (2000) Implant materials, designs, and surface topographies: Their effect on osseointegration. A literature review. *Int J Oral Maxillofac Implants* 15:675-690.

174. Tanahashi M., Kokubo T., Nakamura T., Katsura Y.,Nagano M. (1996) Ultrastructural study of an apatit layer formed by a bio-mimetic process and its bonding to bone. *Biomaterials* 17(1):47-51
175. Tatum H. (1986) Maxillary and sinus implant reconstruction. *Dent Clin North Am* 30:207-229
176. Taylor T., Agar J.R., Vogiatzi T. (2000) Implant Prosthodontics: Current Perspective and Future Directions. *Int J Oral Maxillofac Implants* 15 (1):66-75
177. Tepper G, Haas R, Zechner W, Krach W, Watzek G. (2002) Three-dimensional finite element analysis of implant stability in the atrophic posterior maxilla. *Clin Oral Implants Res* 13:657-665
178. Testori T., Wiseman L., Woolfe S., Porter SS. (2001) A prospective multicenter clinical study of Osseotite implant: four- year interim report *Int J Oral Maxillofac Implants* 16(2):193-2000
179. Thomas KA., Kay JF., Cook SD. & Jarcho M. (1987) The effect of surface macrotexture and hydroxylapatite on the mechanical strengths and histologic profiles of titanium implant materials. *J Biomedical Material Res* 26:1989-1001
180. Tripplet GR., Sterling SR., Laskin MD. (2000) Oral and maxillofacial surgery advances in implant dentistry *Int J Oral Maxillofac Implants* 15(1):47-55
181. Tulasne JF. (1992) Osseoinetgarted fixtures in pterygoid region. In: Worthington, P.& Brånemark PI. (eds). Advanced Osseointegarted Surgery, 1st Edition London: Quintessence Publishing 182-188
182. Valeron FJ., Velazquez JF. (1997) Placement of screw-type implants in the pterygomaxillary-pyramidal region: surgical procedure and preliminary results. *Int J Oral Maxillofac Implants* 12(6):814-819
183. Van Oosterwyck H, Duyck J, Vander Sloten J, Van der Perre G, Naert I. (2002) Peri-implant bone strains in cases of dehinscence: a finite element study *Clin. Oral Impl. Res*, 13: 327-333
184. Venturelli A. (1996) A modified surgical protocol for placing implants in the maxillary tuberosity: clinical results t 36 months after loading with fixed partial dentures. *Int J Oral Maxillofac Implants* 11(6):743-749
185. Von Meyer HV. (1867) Die Erchitecture der spongiosa. *Reichart und DuBois- Raymond Rachieve* 34:15-28
186. Wagner W. (1999) " Konstruktionsprinzipien aus chirurgischer Sicht". In Koeck B., Wagner W. (eds) Implantologie. München; Stutgart; Jena; Lübeck; Ulm: Urban und Schwarzenberg, 55-75
187. Wataha JC. (1996) Materials for endosseous dental implants *J Oral Rehabil* 23:79-90
188. Watzek G., Blahout R. (1993) " Historischer Rückblick ". In: Watzek G. ; Enossale Implantate in der oralen Chirurgie, Quintessence Berlin- Chicago- London- Moskau- Sao Paulo- Tokio
189. Watzek G.& Ulm C. (2002) Compromised Alveolar Bone Quality in Edentulous Jaws. In: Zarb G., Lekgolm U.,Albrektsson T., Tenenbaum H. (eds) Aging, Osteoporosis and Dental Implants. Chicago: Quintessence, 67-84
190. Weber H., Benzig UR. (1992) Biomechanical aspects of implant- supported prosthesis for edentulous jaws. In: Laney Wr., Tolman DE (eds). Tissue Integration in Oral , Orthopedic, and Maxillofacial Reconstruction. Chicago: Quintessence, 149
191. Weinberg LA. (1993) Biomechanics of force distribution in implant-supported prostheses. *Int J Oral Maxillofac Implants* 8(1) :19-31
192. Weinberg LA. (2001) Therapeutic biomechanics concepts and clinical procedures to reduce implant loading. Part I. *J Oral Implantol* 6(23):291-301
193. Weinstein AM, Klawitter JJ, Anand SC, Schuessler R. (1976) Stress analysis of porous rooted implants. *J Dent Res* 55:772-7
194. Williams HB, Ochiai KT, Hojo S, Nishimura R, Caputo A. (2001) Retention of maxillary implant overdenture bars of different designs. *Journal of Prosthetic Dentistry* 86: 603-7
195. Wolf J. (1986) The laws of bone remodelling Maquet P., Furlong R. translators. Berlin:Springer Verlag
196. Wong M., Eulenberger J., Schenk R. & Hunzinker E. (1995) Effect of surface topography on the osseointegration of implant materials in trabecular bone. *J Biomedical Material Res* 29:1567-1575
197. Zarb GA, Albrektsson T. (1991) Osseointegration: A requiem for the periodontal ligament? (guess editorial) I*nt J Periodontics Restorative Dent* 11:88-91
198. Zarb GA., Schmitt A. (1995) Implant prosthodontic treatment options for the edentulous patient. *J Oral Rehabil* 22:661-71